# 集成电路原理与设计
# 10.运算放大器

宋爽
shuangsonghz@zju.edu.cn

# Course Arrangements

| 课数 | 内容 | 课数 | 内容 |
|---|---|---|---|
| 1 | 导论 | 9 | 差分放大器 |
| 2 | 工艺流程 | 10 | 运算放大器 |
| 3 | 器件模型一 | 11 | 逻辑门 |
| 4 | 器件模型二 | 12 | 组合逻辑 |
| 5 | 模拟基本单元 | 13 | 时序逻辑 |
| 6 | 电流镜与基准 | 14 | 加法器/乘法器 |
| 7 | 单级放大器 | 15 | 集成电路专题讲座一 |
| 8 | 课堂测验 | 16 | 集成电路专题讲座二 |

# Outline

- General Consideration
- One-Stage Op Amps
- Two-Stage Op Amps
- Compensation of 2-Stage Op Amps
- Other Issues of Op Amps

# Why it is called Op. Amp

## For different operations based on feedbacks

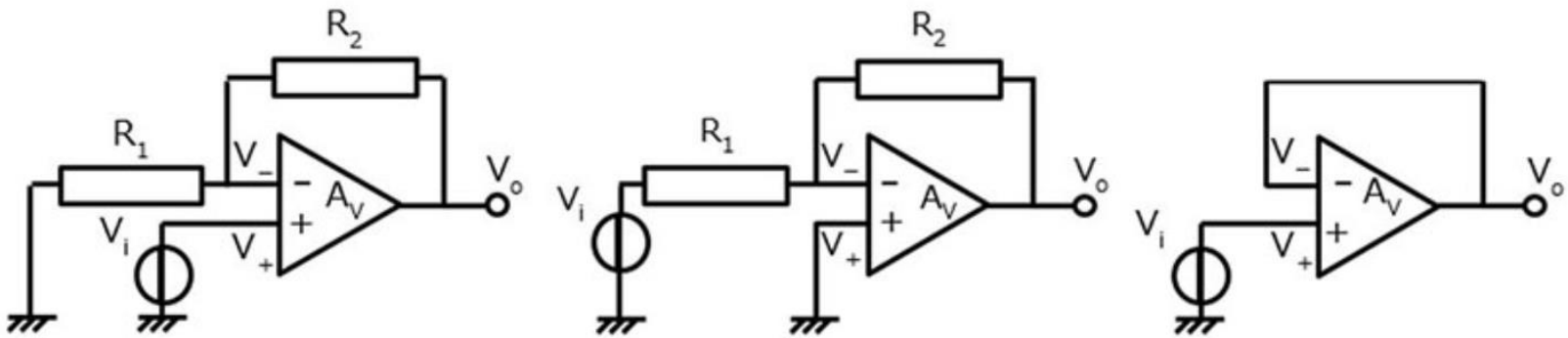


Noninverting amplifier

$G_V^* = (R_1 + R_2) / R_1$

Inverting amplifier

$G_V^* = R_2 / R_1$

Voltage follower

$G_V^* = 1$

# Why it is so important

## In signal chain applications: IA+ADC

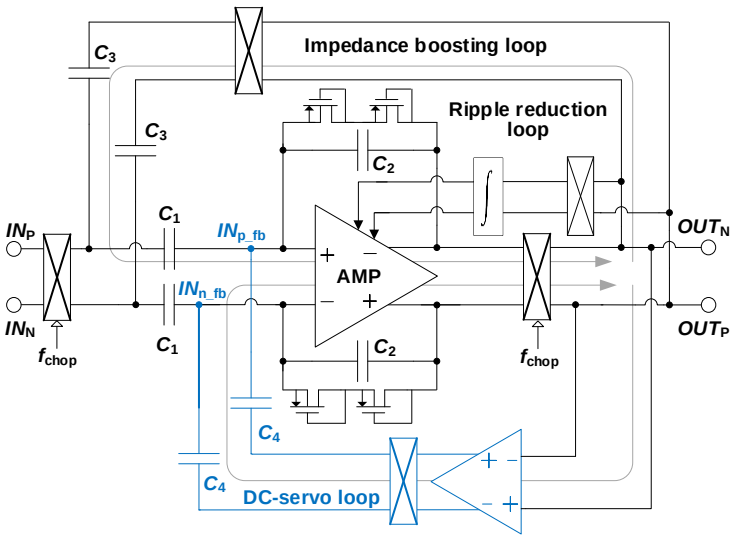


## ADC core amplifier

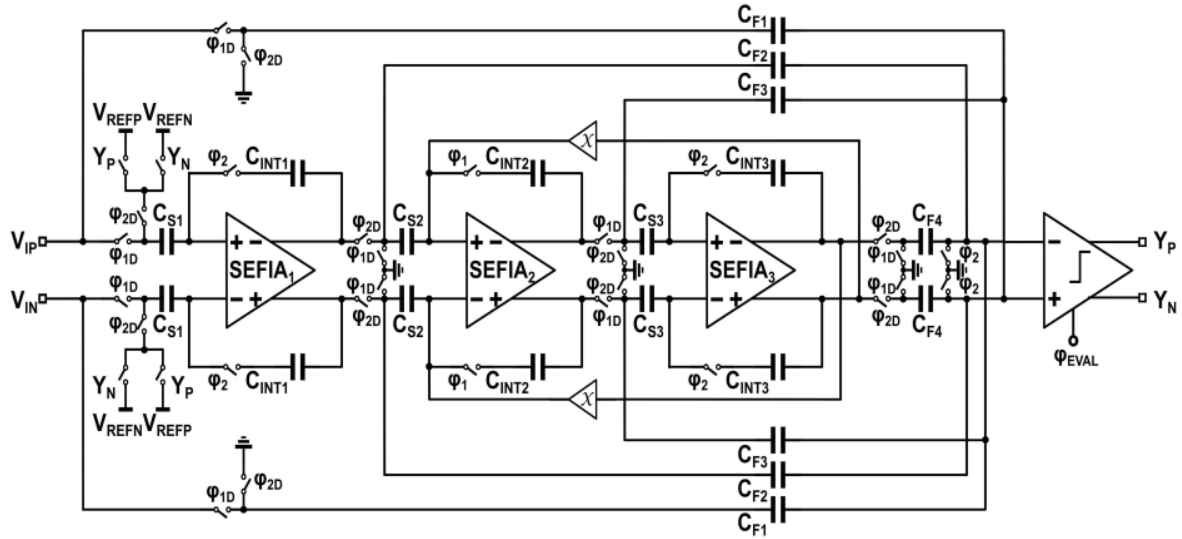

# Why it is so important

## In power management applications:

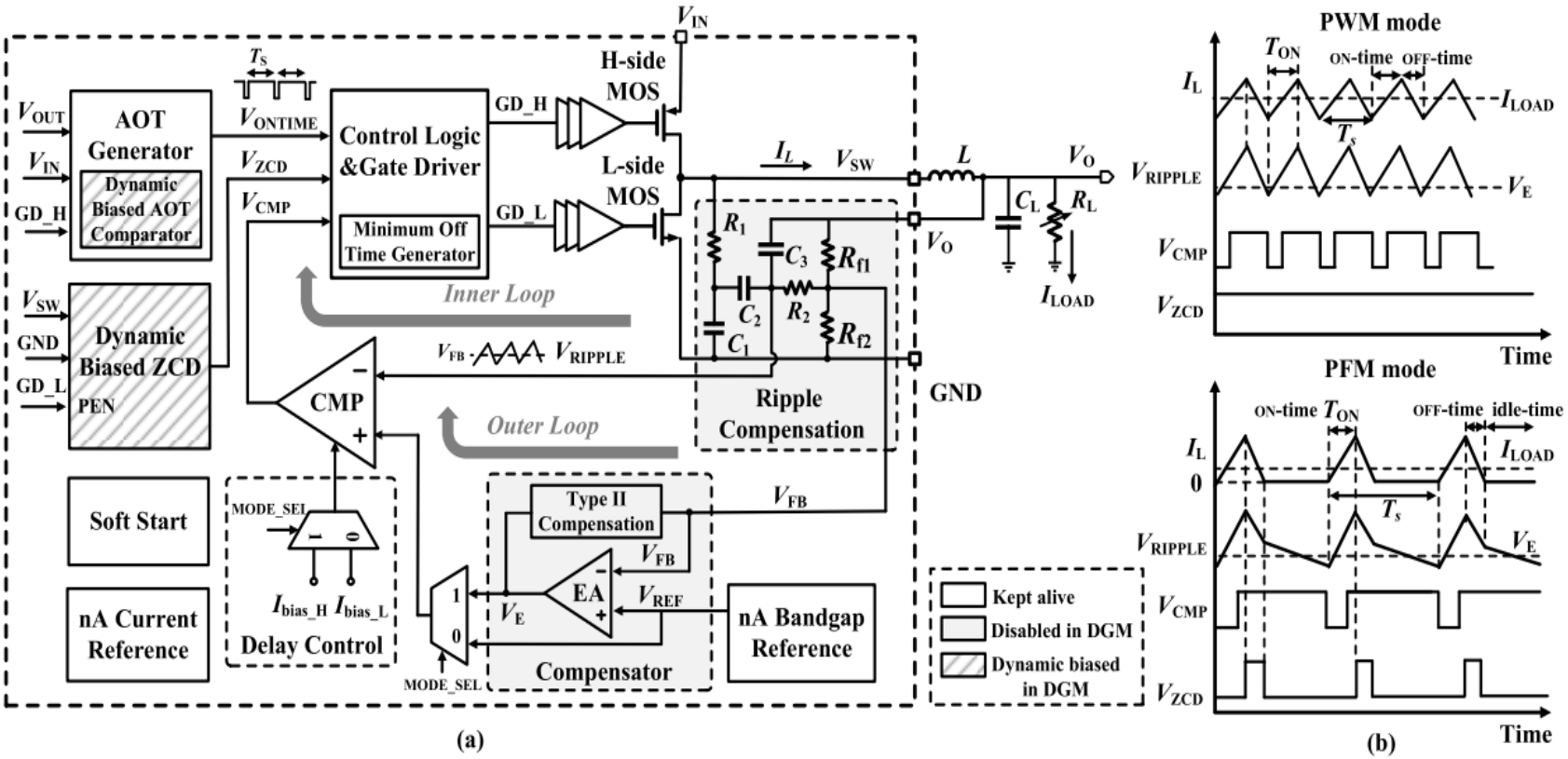

# Basic Concept of Op Amp

## A high-gain differential amplifier

- **Ideal op amp**
  - Voltage controlled voltage source
  - **Infinite** gain
  - Infinite **input impedance**
  - Zero **output impedance**
  - Infinite CMRR and PSRR

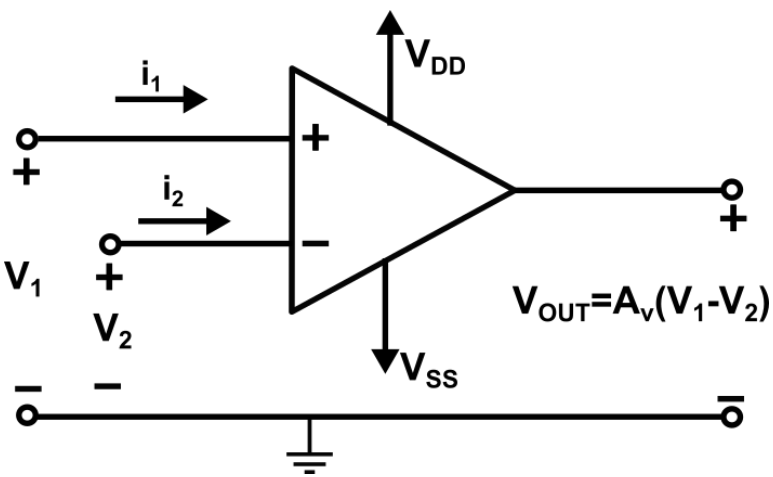


- **Application**
  - DC generation
  - Amplification
  - Integration/Differentiation
  - Filtering (HP/LP/BP)

If the infinite differential gain, then

$$v_1 - v_2 = v_i = 0$$

$$i_1 = 0 \text{ and } i_2 = 0$$

The differential input voltage is zero and no current flow into or out of the differential input

**Feedback**

# Nonideal model of Op amp

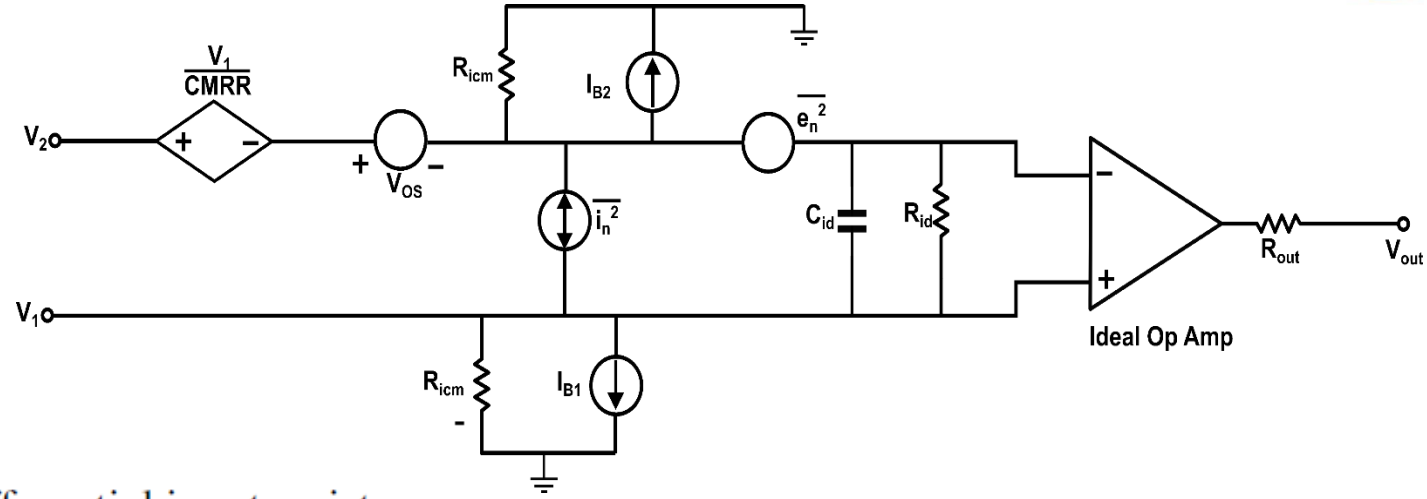


where

$R_{id}$ = differential input resistance

$C_{id}$ = differential input capacitance

$R_{icm}$ = common mode input resistance

$V_{OS}$ = input-offset voltage

$I_{B1}$ and $I_{B2}$ = differential input-bias currents

$I_{OS}$ = input-offset current ($I_{OS} = I_{B1}$-$I_{B2}$)

$CMRR$ = common-mode rejection ratio

$e_n^2$ = voltage-noise spectral density (mean-square volts/Hertz)

$i_n^2$ = current-noise spectral density (mean-square amps/Hertz)

# Performance Parameters

## □ Gain

- Open-loop gain: DC条件下，在输入加一小信号，得到输出电压

  $A_d$=10~$10^5$ (20dB~100dB)

  High gain: $A_d$ ~ 80dB - 100dB

- Common-mode Gain: 在输入加共模小信号，得到输出电压

  $A_{CM}$ ~ 20dB - 40dB

- CMRR( Common-mode Rejection Ratio)

  CMRR ~ 40dB - 80dB

# Example Non-inverting Voltage Amplifier.

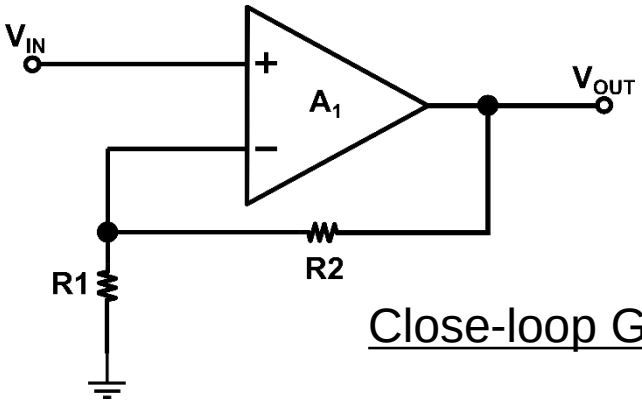


- Input and output swing: rail-to-rail
- Amplifier buffer
- **High open-gain could suppress nonlinearity**

Close-loop Gain: $\left(V_{in} - \frac{R_2}{R_1 + R_2} V_{out}\right) A_1 = V_{out}$

$$\frac{V_{out}}{V_{in}} = \frac{A_1}{1 + \frac{R_2}{R_1 + R_2} A_1} = \frac{R_1 + R_2}{R_2} \frac{A_1}{1 + \frac{R_1 + R_2}{R_2} A_1} \approx \left(1 + \frac{R_1}{R_2}\right)\left(1 - \frac{R_1 + R_2}{R_2} \frac{1}{A_1}\right)$$

$$= \frac{1}{\beta}\left(1 - \frac{1}{\beta A_1}\right) \xrightarrow{\beta A \to \infty} \frac{1}{\beta}$$

Feedback coefficient: $\beta = \frac{R_2}{R_1 + R_2}$

Loop gain: $\beta A_1$

Relative gain error: $\frac{1}{\beta A_1}$

The circuit has a nominal gain of 10. i.e., $1+R_1/R_2=10$
If a gain error **<1%** => $\boldsymbol{A_1}$**>1000**

**Higher open gain ➔ smaller gain error**

# Small-signal behavior of frequency response

- Differential and common-mode frequency response

$$V_{out}(s) = A_d(s)\left[V_1(s) - V_2(s)\right] \pm A_C(s)\left(\frac{V_1(s) + V_2(s)}{2}\right)$$

- Differential-frequency response:

$$A_d(s) = \frac{A_{d0}}{\left(\frac{s}{p_1} - 1\right)\left(\frac{s}{p_2} - 1\right)\left(\frac{s}{p_3} - 1\right)\cdots} = \frac{A_{d0}\, p_1 p_2 p_3 \cdots}{(s - p_1)(s - p_2)(s - p_3)\cdots}$$

where $p_1$, $p_2$, $p_3$, … are the poles of the differential-frequency response (ignoring zeros)

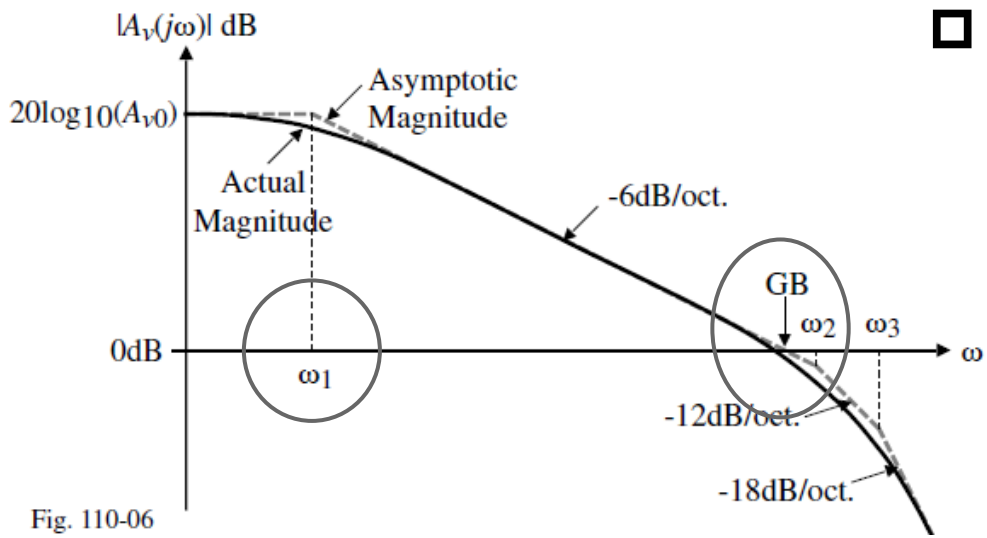

Fig. 110-06

- **Bandwidth: BW**
  - **Unity-Gain frequency: GB** $f_u$ -> $w_u$
  - **-3dB frequency:** $f_{-3dB}$ -> $w_1$

# Large-signal behavior of frequency response

在瞬态输入**大信号**工作时，表征运放的速度：

- 转换速率 *SR* (Slew Rate)
  - *SR*= output voltage rate limit of the op amp
- 建立时间 $T_S$ (Settling time, usually <1%)

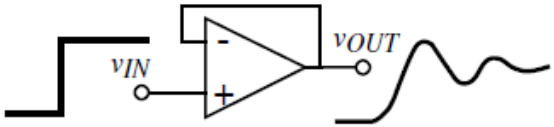


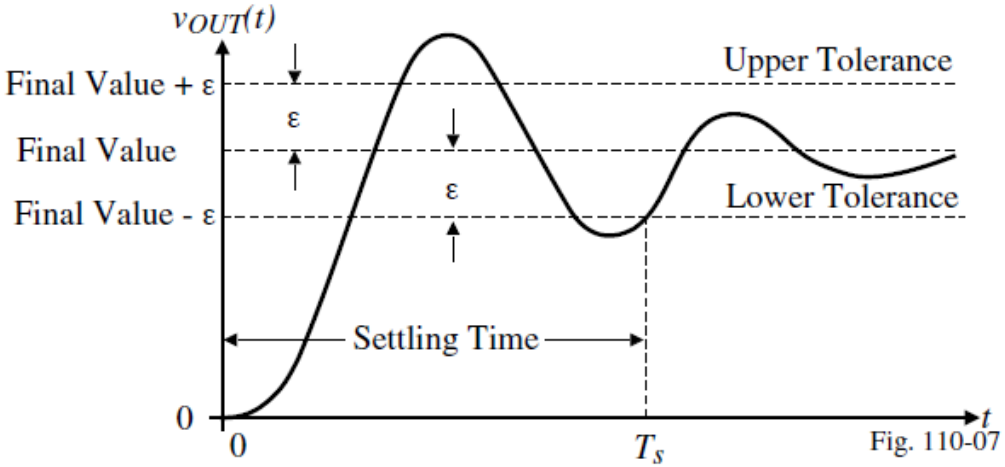


Fig. 110-07

# Example

Assume the op amp is a single-pole voltage amplifier and $V_{in}$ is a small step input. Calculate the time for $V_{out}$ to reach within 1% and the unity-gain bandwidth if $1+R_1/R_2=10$ and the settling time <5ns.

**Solution:** *Speed vs. Bandwidth*

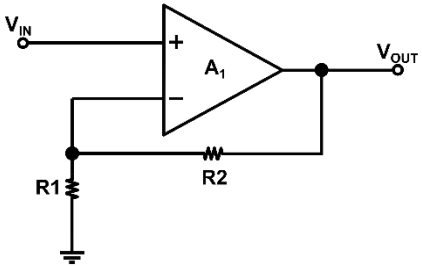


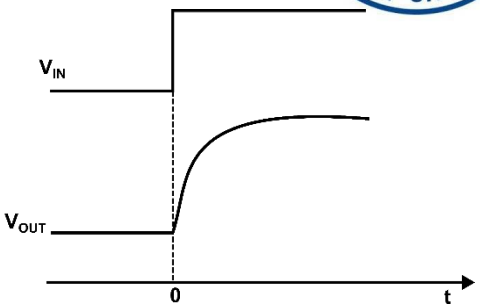


For a single-pole amp:

$$A(s) = \frac{A_0}{(1 + s/\omega_0)}$$

$$\frac{V_{out}}{V_{in}}(s) = \frac{A(s)}{1 + \frac{R_2}{R_1 + R_2} A(s)} = \frac{A_0/(1 + A_0\beta)}{1 + \frac{s}{(1 + A_0\beta)\omega_0}}$$

**Bandwidth expanding**

$$\tau = \frac{1}{(1 + A_0\beta)\omega_0} \approx \left(1 + \frac{R_1}{R_2}\right)\frac{1}{A_0\omega_0}$$

$$V_{in} = au(t) \Rightarrow V_{out} = a\left(\frac{A_0}{1 + \beta A_0}\right)\left(1 - \exp\frac{-t}{\tau}\right)u(t)$$

For 1% settling: $V_{out} = 0.99V_F$ $\quad 1 - \exp\frac{-t_{1\%}}{\tau} = 0.99 \Rightarrow t_{1\%} = \tau \ln 100 = 4.6\tau < 5ns$

$$\tau \approx 1.09ns$$

$$A_0\omega_0 \approx (1 + R_1/R_2)/\tau = 9.21\,Grad/s \qquad (1.47GHz)$$

For 0.1% settling: $t_{0.1\%} = \tau \ln 1000 = 6.9\tau$

# Performance Parameters

- **Output Swing**: output voltage range without distortion
- **ICMR**: (Input Common Mode Range)
  - ICMR= the voltage range over which the input common-mode signal can vary without influence the differential performance

- **Linearity:** input-pair exhibit a nonlinear relation between its differential drain current and its input voltage
- **PSRR**: (Power Supply Rejection Ration)

$$PSRR = \frac{\Delta V_{DD}}{\Delta V_{OUT}} A_V(s) = \frac{V_O / V_{in} \left(V_{dd} = 0\right)}{V_O / V_{dd} \left(V_{in} = 0\right)}$$

- **Offset:** the minimum signal level that can be processed with reasonable quality
- **Noise**

# Specifications for a typical unbuffered CMOS Op Amp

| Boundary Conditions | Requirement |
|---|---|
| Process Specification | See Tables 3.1-1 and 3.1-2 |
| Supply Voltage | ±2.5 V ±10% |
| Supply Current | 100 $\mu$A |
| Temperature Range | 0 to 70°C |

| Specifications | Value |
|---|---|
| Gain | ≥ 70 dB |
| Gainbandwidth | ≥ 5 MHz |
| Settling Time | ≤ 1 $\mu$sec |
| Slew Rate | ≥ 5 V/$\mu$sec |
| Input *CMR* | ≥ ±1.5 V |
| *CMRR* | ≥ 60 dB |
| *PSRR* | ≥ 60 dB |
| Output Swing | ≥ ±1.5 V |
| Output Resistance | N/A, capacitive load only |
| Offset | ≤ ±10 mV |
| Noise | ≤ 100nV/$\sqrt{\text{Hz}}$ at 1KHz |
| Layout Area | ≤ 10,000 min. channel length$^2$ |

# AMP and OTA

## Inverting Voltage Amplifier $V_{inp} = 0$

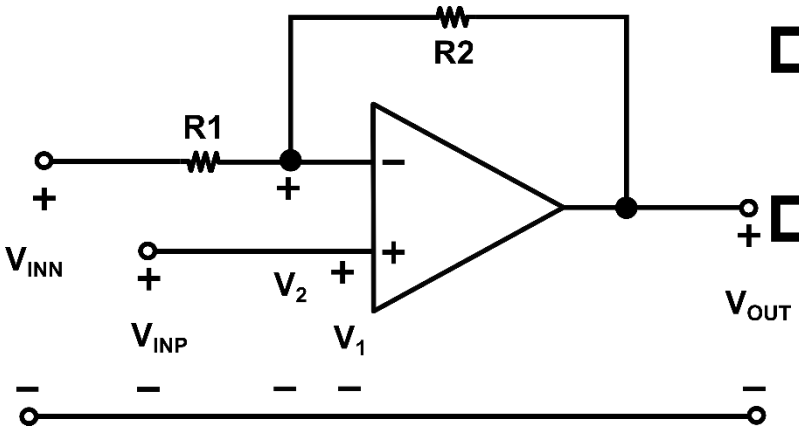


- Input common mode: a fixed voltage
- Input range could be small, but the output range could be rail-to-rail

$$A \to \infty \quad A_V = \frac{V_{out}}{V_{in}} = -\frac{R_2}{R_1}$$

## Operational Transconductance Amplifiers (OTAs)

- Driving capacitive load： **$G_m$ stage**
- High gain ： **high output resistance**
- Generally be used in switched-capacitor (SC) circuits

# Outline

- General Consideration
- One-Stage Op Amps (First Stage of Opamps)
  - OTA
  - Telescopic
  - Folded-Cascode
- Two-Stage Op Amps
- Compensation of 2-Stage Op Amps
- Other Issues of Op Amps

# Basic Topologies

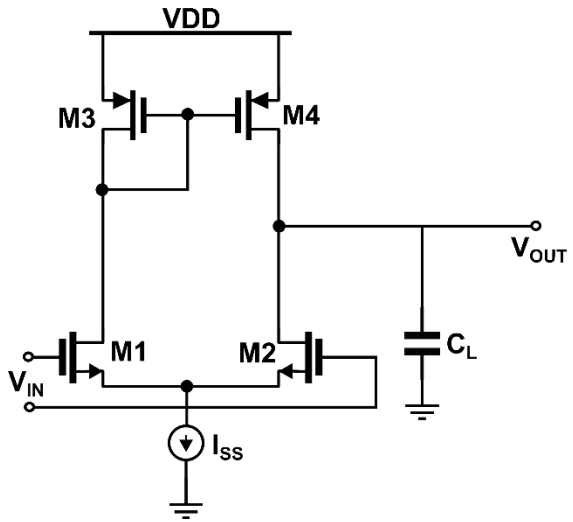


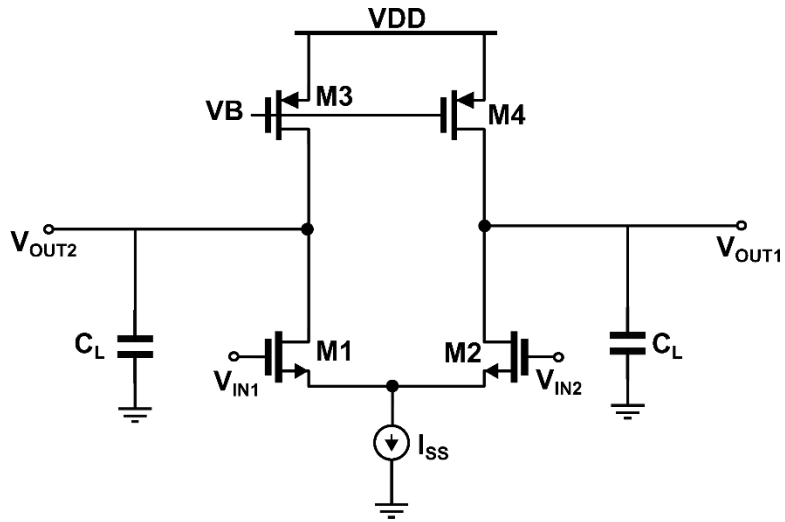


- **Low-frequency gain**: $A_O = g_{mN} r_{out} = g_{mN}\left(r_{ON} // r_{OP}\right) < g_{mN} r_O$
- **Bandwidth**: $\omega_1 = \dfrac{1}{C_L R_{out}} = \dfrac{1}{\left(r_{O2} // r_{O4}\right) C_L}$ $\quad \omega_u = \dfrac{g_{mN}}{C_L}$
- **Output Swing** (single-side): $V_{DD}$ -3$V_{OV}$
- **Mirror pole** in single ended

# Example

Calculate the input common-mode voltage range and the closed-loop output impedance of **the unity-gain buffer**.

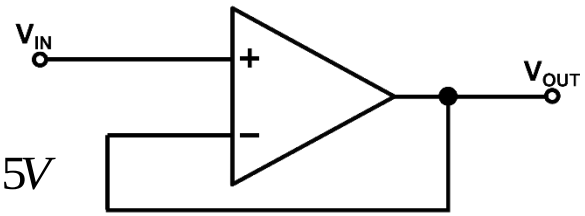


## Input common-mode voltage range

**All transistors operate saturation region**

$$V_{in,\min} = V_{ISS} + V_{GS1} = V_{ISSds,sat} + V_{th1} + V_{ds,sat1} = 0.1 + 0.3 + 0.1 = 0.5V$$

$$V_{in,\max} = V_{DD} - \left(\left|V_{GS3}\right| + V_{th1}\right) = 1 - \left(0.1 + 0.3\right) = 0.9V$$

$$V_{in,\max} - V_{in,\min} = V_{DD} - \left|V_{th3}\right| - 3V_{ds,sat} = 0.4V$$

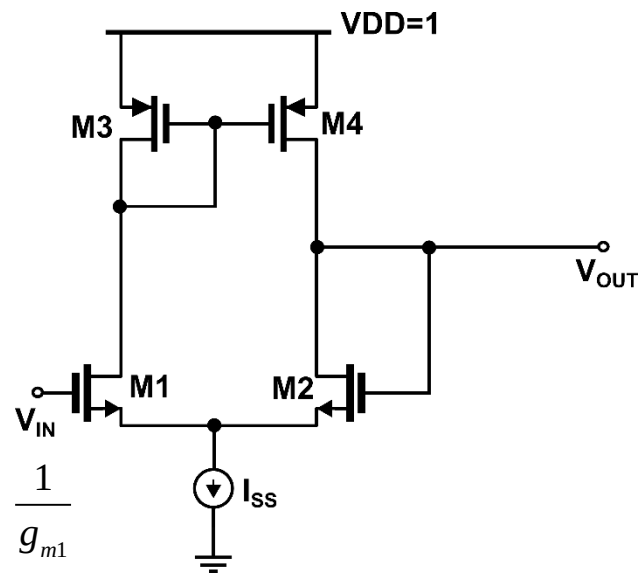


## Output resistance

- The open-loop output impedance: $r_{O2} // r_{O4}$
- Loop gain: $g_{m1}\left(r_{O2} // r_{O4}\right)$
- The closed-loop output impedance : $\dfrac{r_{O2} // r_{O4}}{1 + g_{m1}\left(r_{O2} // r_{O4}\right)} \approx \dfrac{1}{g_{m1}}$

*Voltage feedback at output*

**The closed-loop pole is independent of open-loop output impedance.**

# Outline

- General Consideration
- One-Stage Op Amps (First Stage of Opamps)
  - OTA
  - Telescopic
  - Folded-Cascode
- Two-Stage Op Amps
- Compensation of 2-Stage Op Amps
- Other Issues of Op Amps

# Telescopic Cascode Op Amps

**High gain!!!** ***×20~40***
**Small output swing!!!**

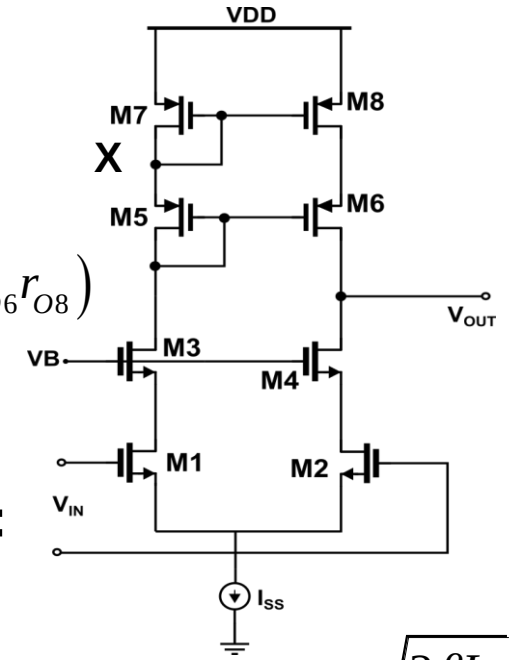


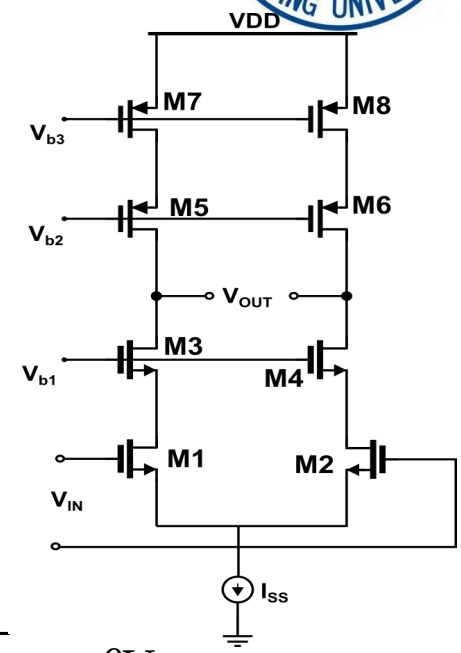


- **Low-frequency gain:**

$$A_O = g_{m2}R_{out} = g_{m2}\left(g_{m4}r_{O2}r_{O4}//g_{m6}r_{O6}r_{O8}\right)$$

$$\approx g_{mN}\left(g_{mN}r_{ON}^2//g_{mP}r_{OP}^2\right)$$

- **Output Swing (single-side):**

$V_{DD}$ -5$V_{OV}$

- **Speed:**
  - Dominant pole $\omega_1 = \dfrac{1}{C_L R_{out}}$ $\omega_u = \dfrac{g_m}{C_L} = \dfrac{\sqrt{2\beta I_O}}{C_L} = \dfrac{\beta V_{eff}}{C_L}$
  - Additional poles X in high frequency
  - Mirror pole in single-ended
- **Be difficult to short telescopic OPAMP output to input (why)**

# Telescopic Cascode Op Amps

## Input common-mode voltage range

All transistors operate saturation region

$$V_{in,\min} = V_{ds,sat,ISS} + V_{GS2} = V_{ds,sat,ISS} + V_{th2} + V_{ds,sat2}$$

$$V_{in,\max} = V_{b1} - |V_{GS3}| + V_{th2}$$

$$V_{in,\max} - V_{in,\min} = V_{b1} - V_{th4} - 3V_{ds,sat}$$

$$V_{b1} > V_{th4} + 3V_{ds,sat}$$

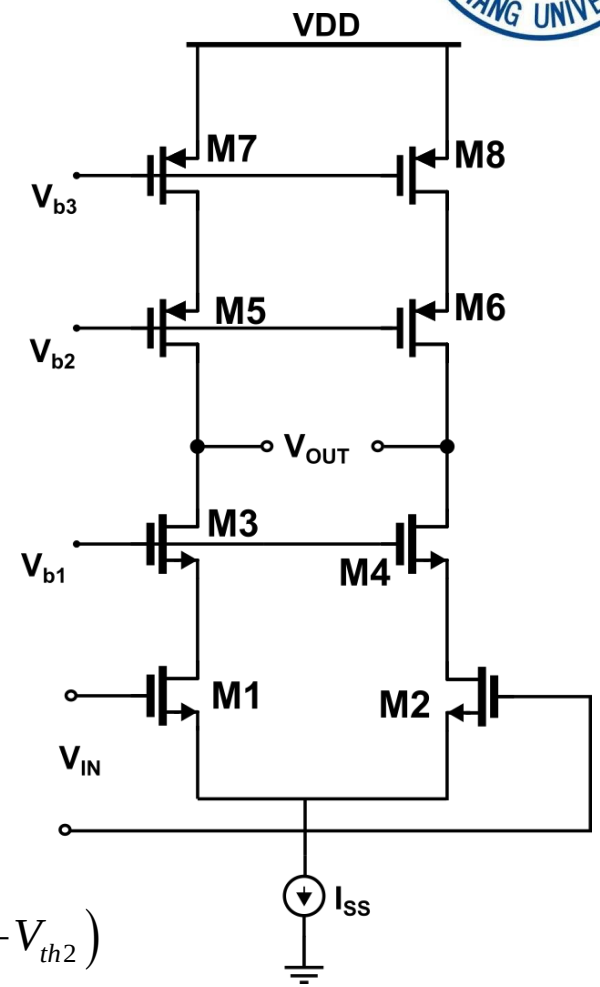


## Output common-mode voltage range

All transistors operate saturation region

$$V_{out,\min} = V_{b1} - V_{th4}$$

$$V_{out,\max} = V_{b2} + |V_{th6}|$$

Output swings: $2\left(V_{out,\max} - V_{out,\min}\right) = 2\left(V_{b2} + |V_{th6}| - V_{b1} - V_{th2}\right)$

$$V_{b2} \uparrow,\ V_{b1} \downarrow \ \Rightarrow \text{output range} \uparrow$$

极限值 $\rightarrow 2\left(V_{DD} - V_{ds8,sat} - V_{ds6,sat} - V_{ds4,sat} - V_{ds2,sat} - V_{ISS,ds,sat}\right) = 2\left(V_{DD} - 5V_{ds,sat}\right)$

# Output common-mode voltage range of unity-gain buffer

All transistors operate saturation region

M2:

$$V_{out,\max} = V_x + V_{th2} = V_b - V_{GS4} + V_{th2}$$

M4:

$$V_{out,\min} = V_b - V_{ds4,sat}$$

$$V_b - V_{th4} \le V_{out} \le V_b - V_{GS4} + V_{th2}$$

$$V_{out,\max} - V_{out,\min} = V_{th4} - (V_{GS4} - V_{th2}) = V_{th2} - V_{ds4,sat}$$

Difficult to short telescopic op amp output to input !!!

High gain, small output swing √

Unity-gain Buffer ✗

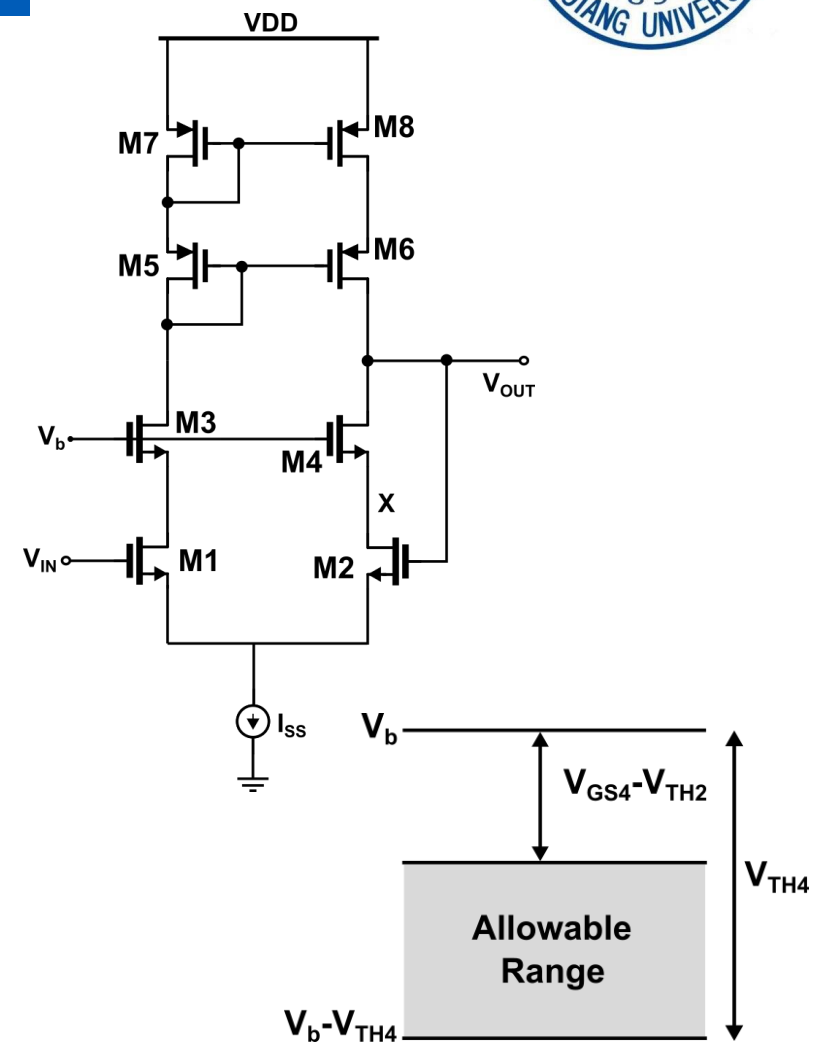

# Outline

- General Consideration
- One-Stage Op Amps (First Stage of Opamps)
  - OTA
  - Telescopic
  - Folded-Cascode
- Two-Stage Op Amps
- Compensation of 2-Stage Op Amps
- Other Issues of Op Amps

# Folded Cascode Op Amps

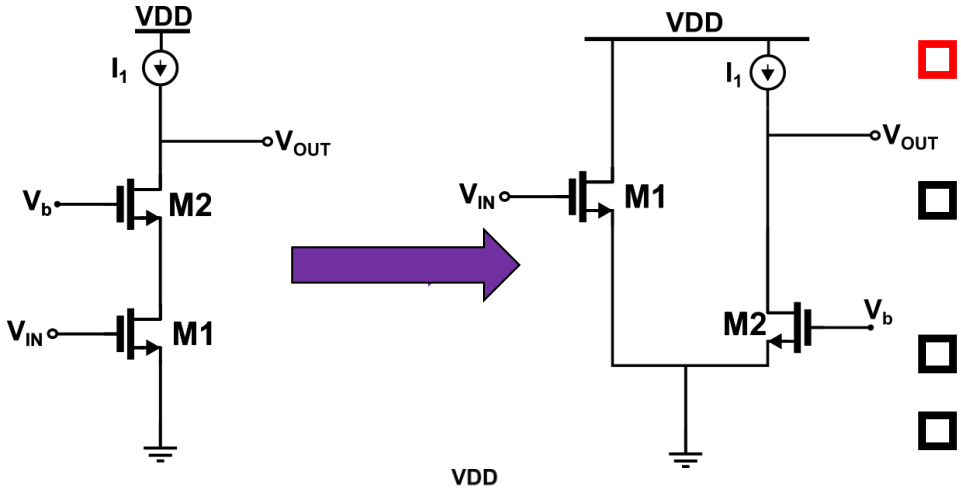


- **Not "stack" the cascode transistor on the input device**
- Consume higher power

$$P = V_{DD} \times \left( I_{SS} + I_{SS1} + I_{SS2} \right) > V_{DD} \times I_{SS}$$

- Output Voltage Swing: $V_{DD}$ -4$V_{OV}$
- Output and input could short together

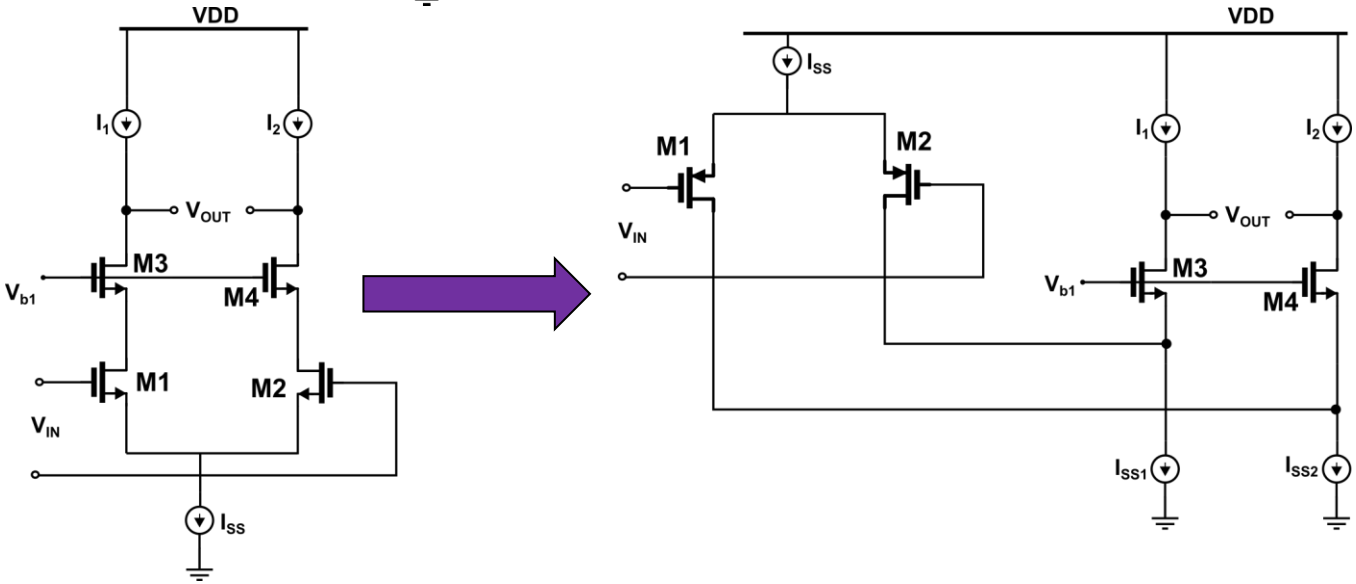

# Folded Cascode Op Amps

- **Voltage Gain**

$$|A_V| = G_m R_{out}$$

$$|A_V| \approx g_{m1}\left[\left(g_{m3}+g_{mb3}\right) r_{O3}\left(r_{O1}//r_{O5}\right)\right] // \left[\left(g_{m7}+g_{mb7}\right) r_{O7} r_{O9}\right]$$

  - 2~3 times lower than a telescopic topology

- **Input Voltage Range: P-diff pair**

$$V_{in,\min} = 0 \quad \checkmark$$

$$V_{in,\max} = V_{DD} - V_{ds,sat,ISS} - V_{GS1}$$

- **Output Voltage Range**

$$V_{out,\min} = V_{b1} - V_{th3} \qquad V_{out,\min} > V_{ds3,sat} + V_{ds5,sat}$$

$$V_{out,\max} = V_{b2} + |V_{th7}| \qquad V_{out,\max} < V_{DD} - \left(V_{ds7,sat} + V_{ds9,sat}\right)$$

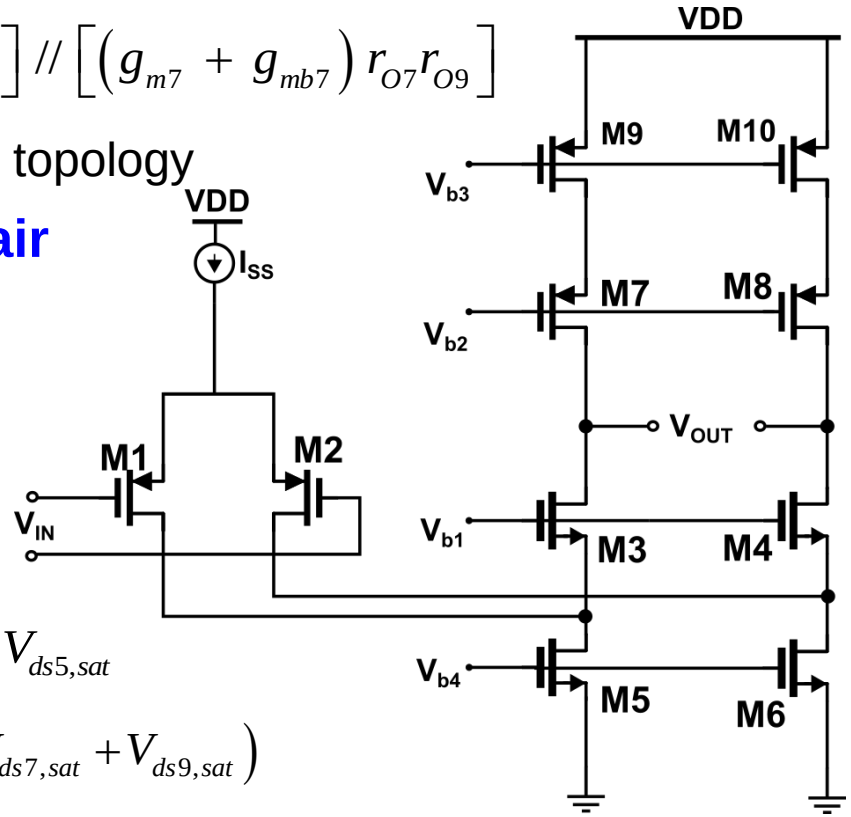

# Folded Cascode Op Amps

## Effect Capacitance on Non-dominant Pole

At "folding point", a large capacitance due to a large current device M5 would be added to the total capacitance.

$$\omega_p = \frac{1}{RC}$$

$$R = \frac{1}{g_{m3} + g_{mb3}}$$

$$C_{tot} = C_{GS3} + C_{SB3} + C_{DB1} + C_{GD1} + C_{DB5} + C_{GD5}$$

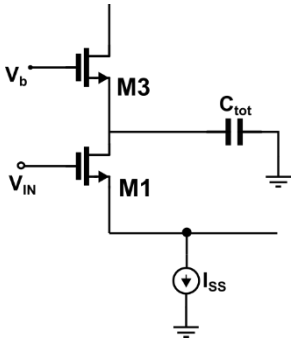


Telescopic

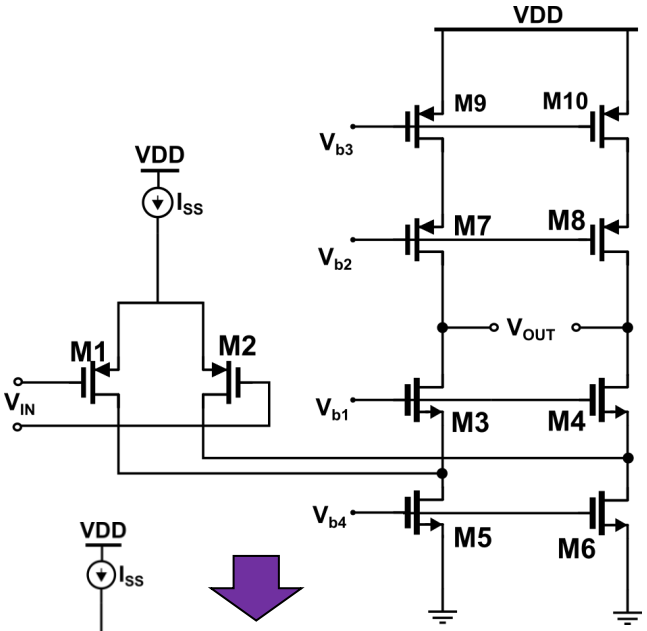


$$C_{tot} = C_{GS3} + C_{SB3} + C_{DB1} + C_{GD1}$$

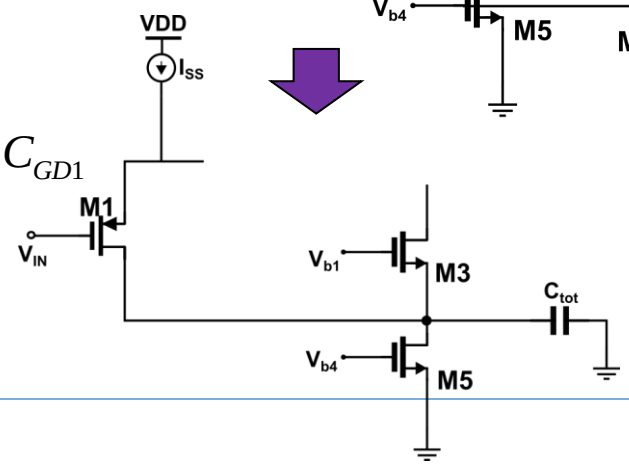

# Input Arrangments

## NMOS vs. PMOS Input

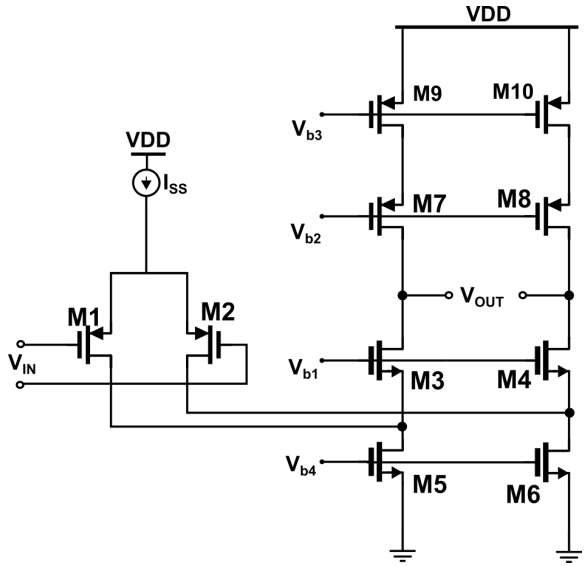


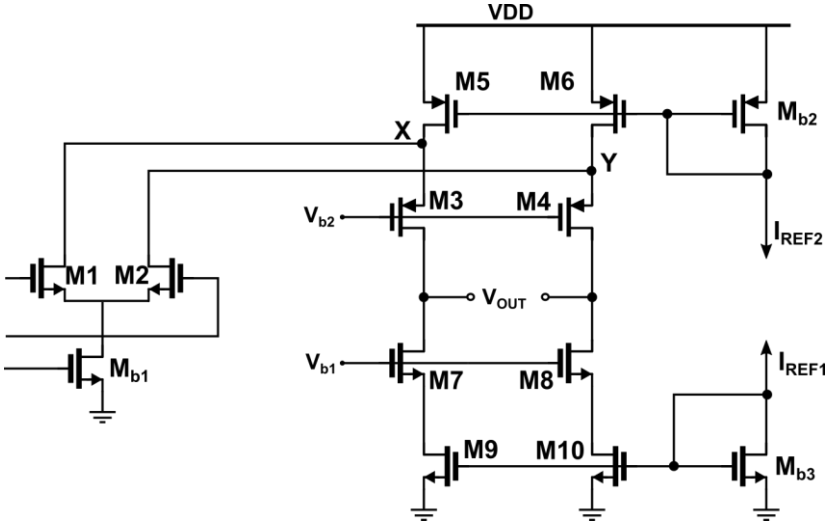


## Other Properties of Folded Cascode

- Slighter **Higher Output Swing** than Telescopic
- Higher power dissipation, similar voltage gain, similar pole frequency
- Input and output can be shorted: 2 overdrive from bound
- A better input CM range

# Rail-to-Rail FC Amplifier

- PMOS input pair (to VSS) + NMOS input pair (to VDD)

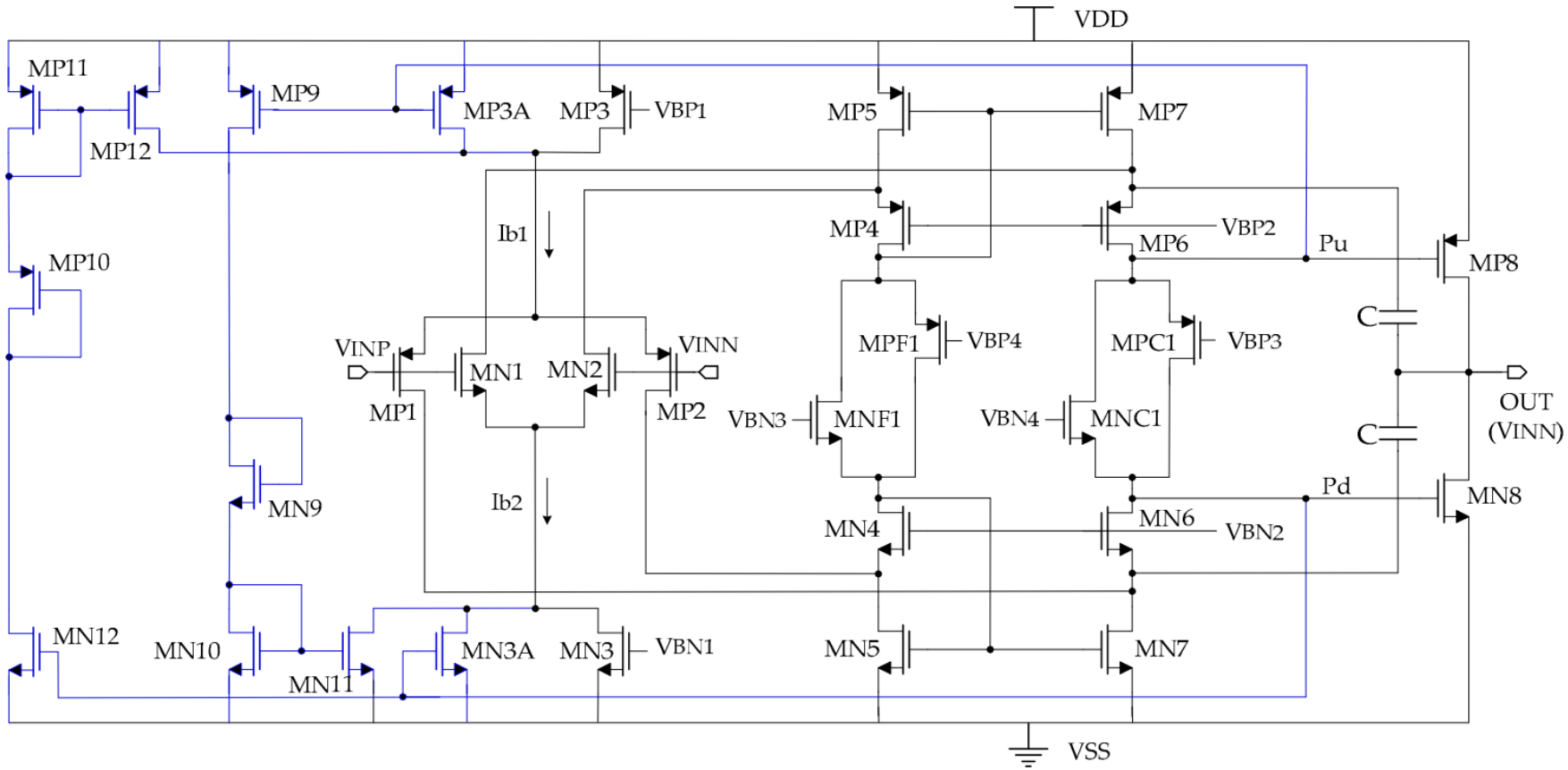

# Outline

- General Consideration
- One-Stage Op Amps
- Two-Stage Op Amps
- Compensation of 2-Stage Op Amps
- Other Issues of Op Amps

# Two-Stage Op Amps

- Design limitation: low supply voltage, high gain and large output swing

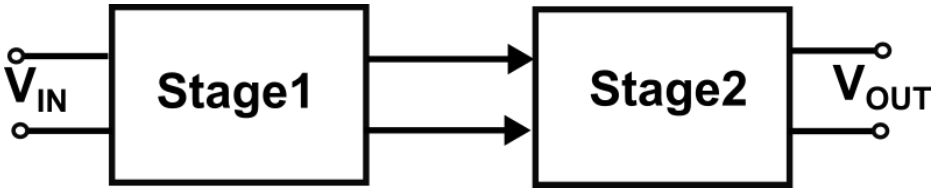


$$A_V = A_{V1} \times A_{V2}$$

Stage 1: High Gain

- Output swing could be small
- OTA

Stage 2: High Swing

- **Can we have more stages?**
  **Feedback stability limits !**

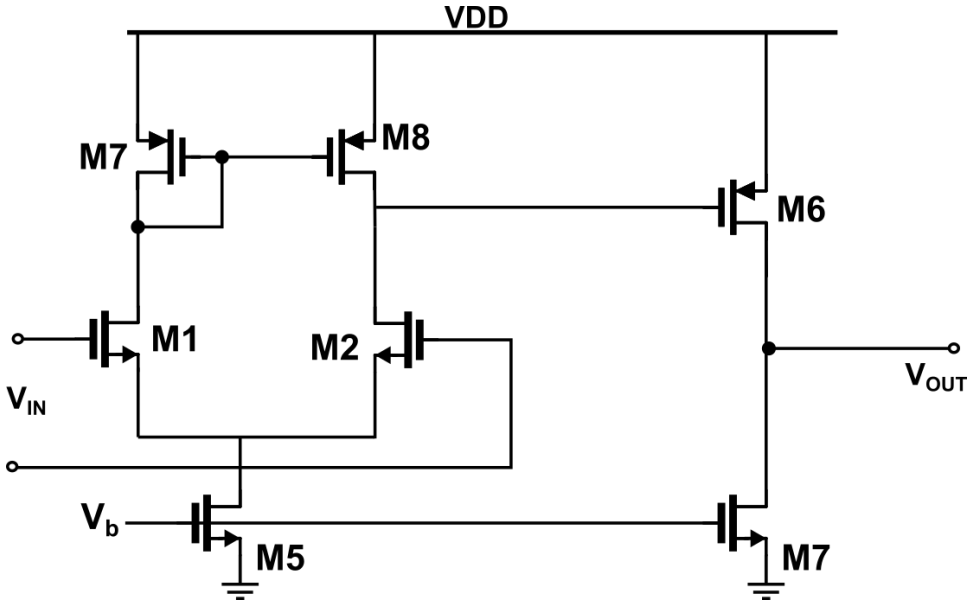

# Two-Stage Op Amps

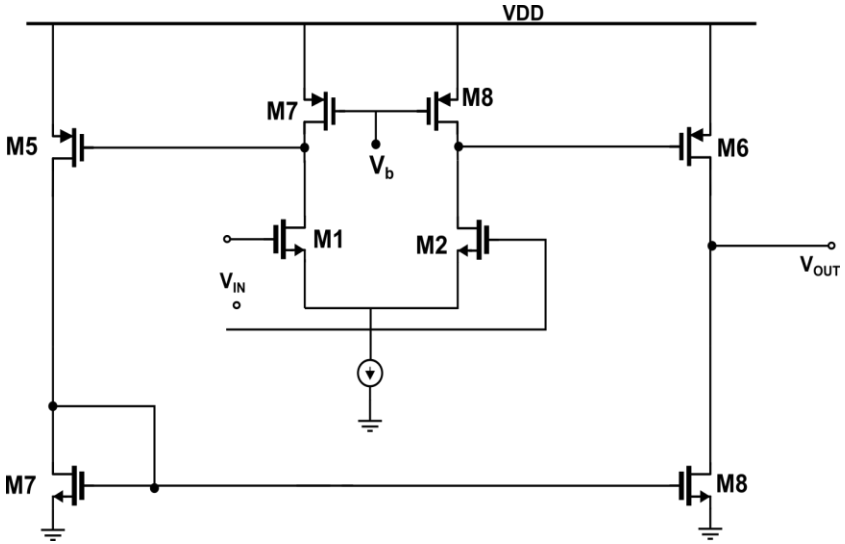


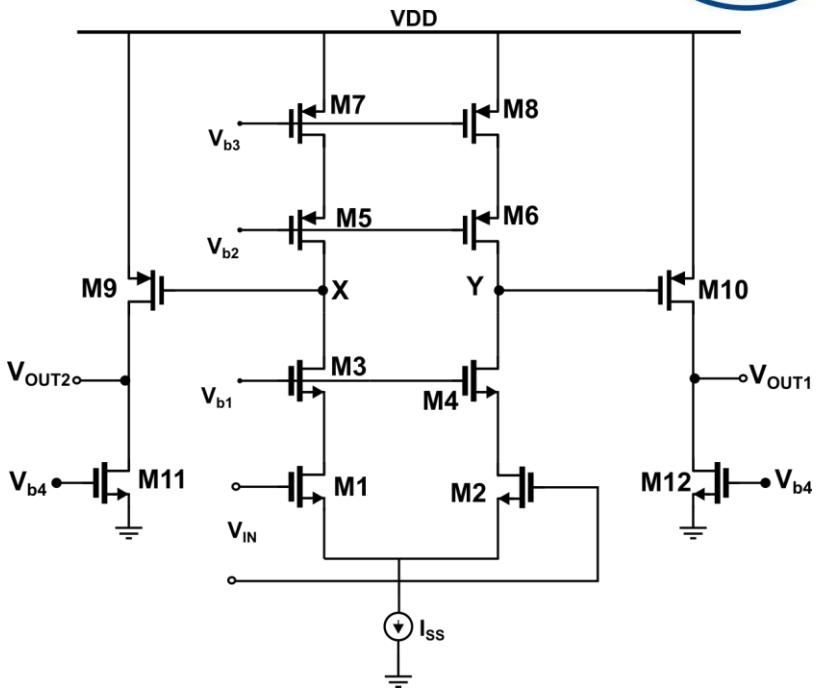


$$A_V = A_{V1} \times A_{V2}$$

$$A_V = g_{m1,2}\left(r_{O1,2}//r_{O3,4}\right) g_{m5,6}\left(r_{O5,6}//r_{O7,8}\right)$$

$$A_V = g_{m1}\left(g_{m3}r_{O3}r_{O1}//g_{m5}r_{O5}r_{O7}\right) g_{m9}\left(r_{O9}//r_{O11}\right)$$

$$V_{out,\min} = V_{ds7,sat}$$

$$V_{out,\max} = V_{DD} - V_{ds5,sat}$$

$$V_{out,\min} = V_{ds11,sat}$$

$$V_{out,\max} = V_{DD} - V_{ds9,sat}$$

# Outline

- General Consideration
- One-Stage Op Amps
- Two-Stage Op Amps
- Compensation of 2-Stage Op Amps

  -> Control Theory

  -> Miller compensation
- Other Issues of Op Amps

# Block diagram of two-stage op-amp

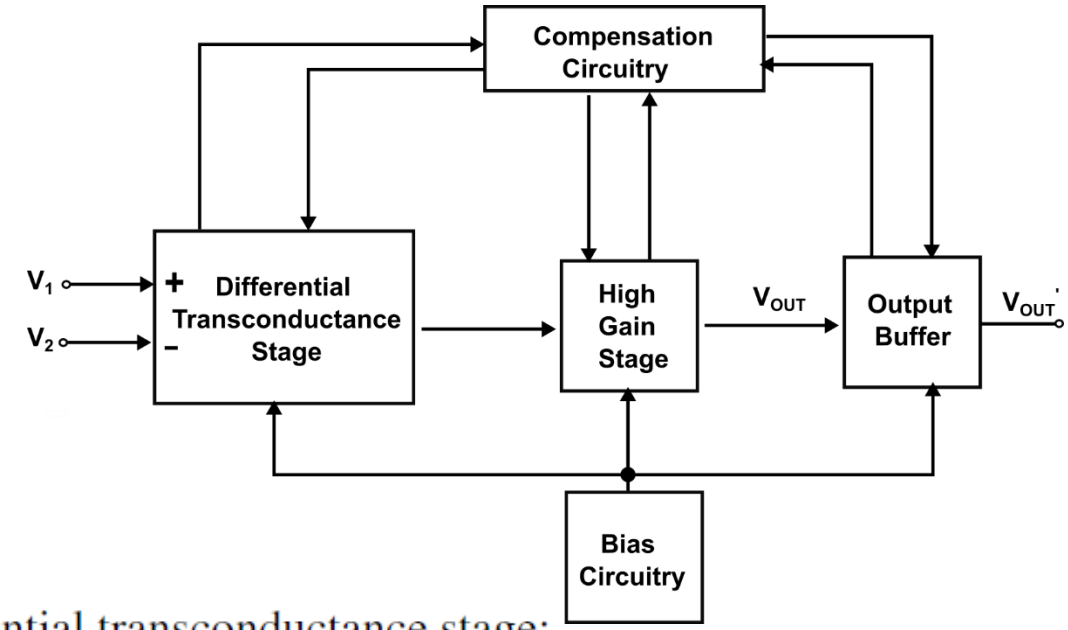


- Differential transconductance stage:
  Forms the input and sometimes provides the differential-to-single ended conversion.
- High gain stage:
  Provides the voltage gain required by the op amp together with the input stage.
- Output buffer:
  Used if the op amp must drive a low resistance.
- Compensation:
  Necessary to keep the op amp stable when resistive negative feedback is applied.

# Rail to rail Folded Cascode

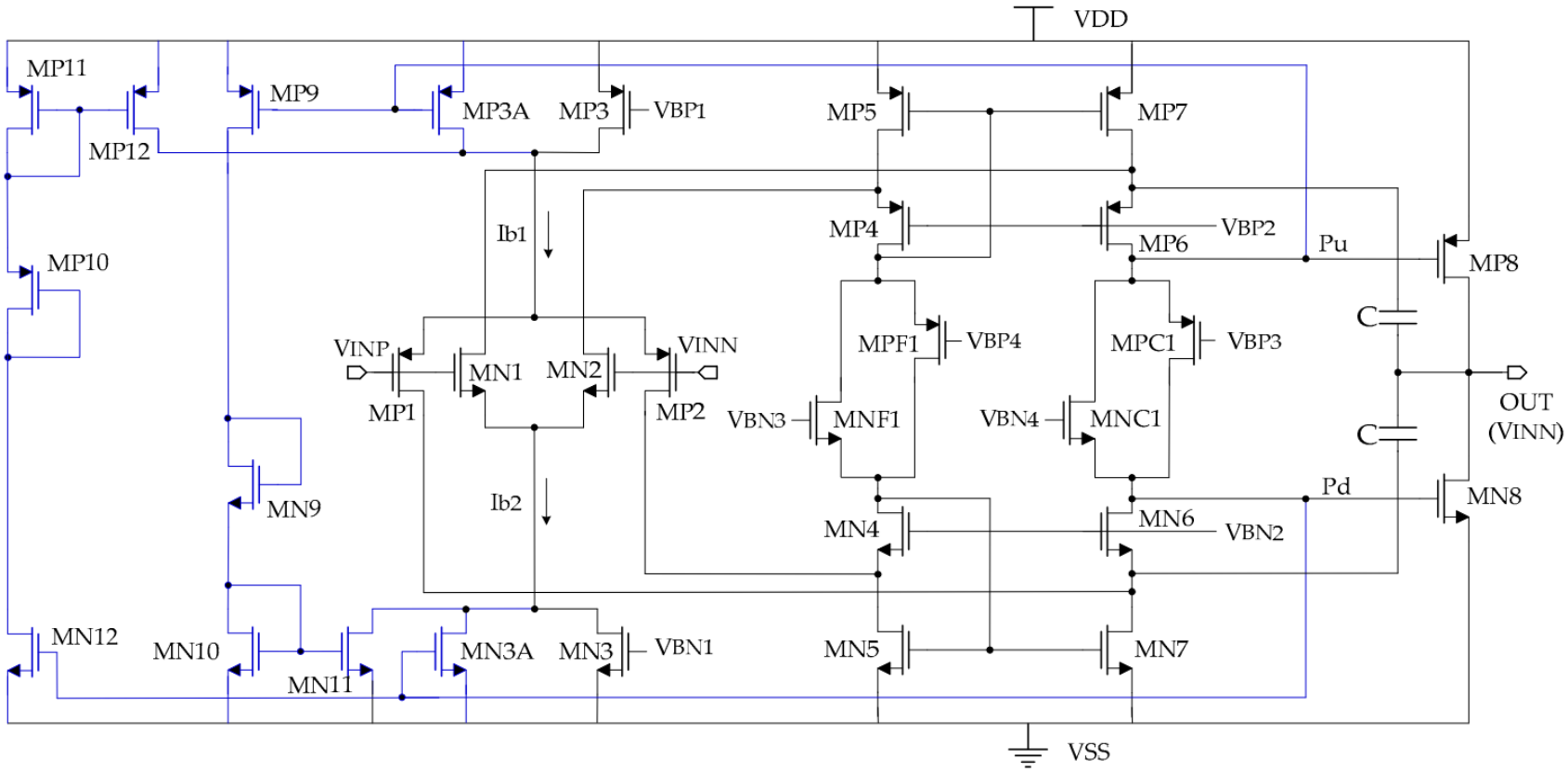


- Input Stage, Gain Stage, Output Stage
- \+ Bias Circuit, Frequency Compensation

# General Considerations of Stability

- Feedback systems suffer from potential instability and they may oscillate!!!

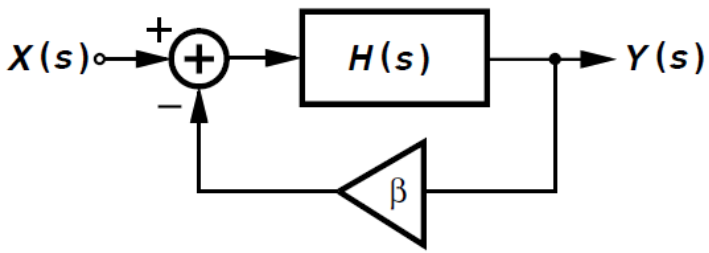


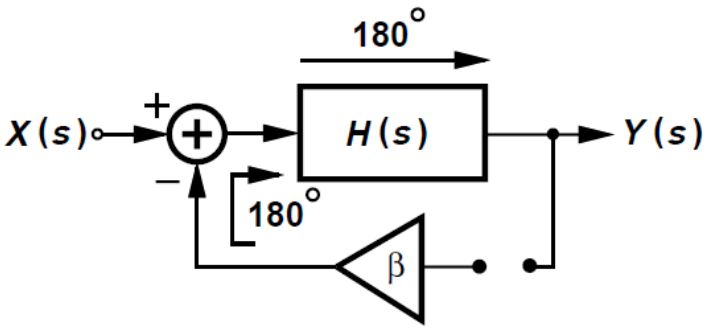


- Closed-loop transfer function: $\dfrac{Y(s)}{X(s)} = \dfrac{H(s)}{1+\beta H(s)}$
- When $\beta H(s) = -1$ , the closed-loop "gain" goes to infinity -> oscillate
- **Barkhausen's Criteria**:

$$\left|\beta H(j\omega_1)\right| = 1$$

$$\angle \beta H(j\omega_1) = -180^\circ$$

- **<u>Negative feedback itself provides 180 phase shift</u>**
- Loop transmission determines the stability issue

# Review: Bode approximation

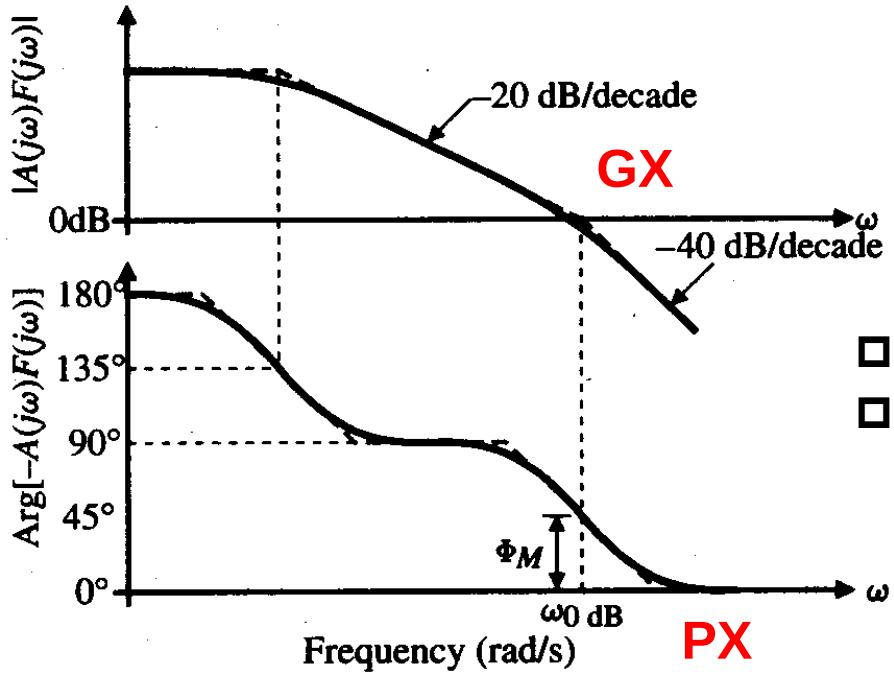


- GX (Gain Crossover Point): |gain|=1
- PX (Phase Crossover Point): phase= –180 °

- The slope of the magnitude at zero frequency: +20dB/dec
  at pole frequency: -20dB/dec.
- Zero 0.1$\omega$: begin to change, $\omega$: +45° , 10$\omega$: +90°
- Pole 0.1$\omega$: begin to change, $\omega$: -45° , 10$\omega$: -90°
- **The key point is that phase changes faster than magnitude.**
- The phase is much more significantly affected by high-frequency poles and zeros than the magnitude is .

# System with bode plots of loop transmission: unstable vs. stable

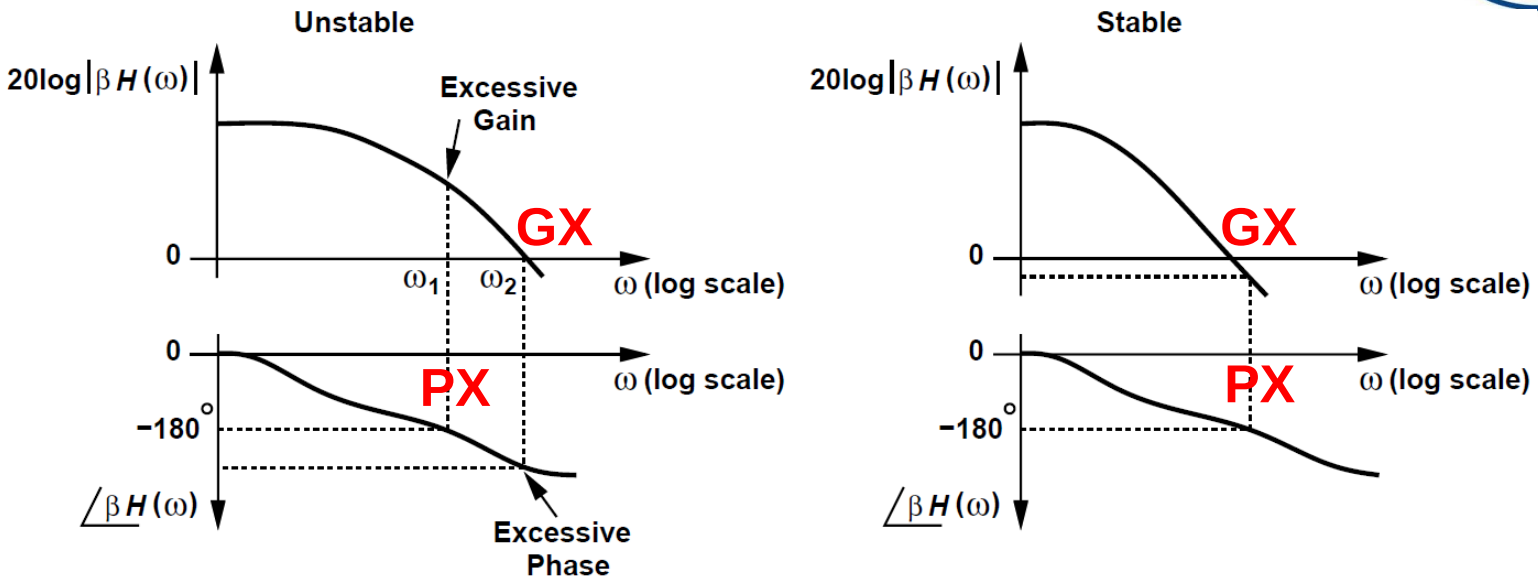


- Phase shift changes the negative feedback to positive

  Oscillate: when phase=– 180° , gain>1

  Stable: when gain=1, phase<– 180°

- In a stable system, PX must be behind GX **(GX<PX),** and GX is equal to unity-gain bandwidth in the open-loop system

Phase Margin $\boxed{PM = 180^\circ + \angle \beta H(\omega = \omega_2)}$

# Location of the poles on a complex plane: Root Locus

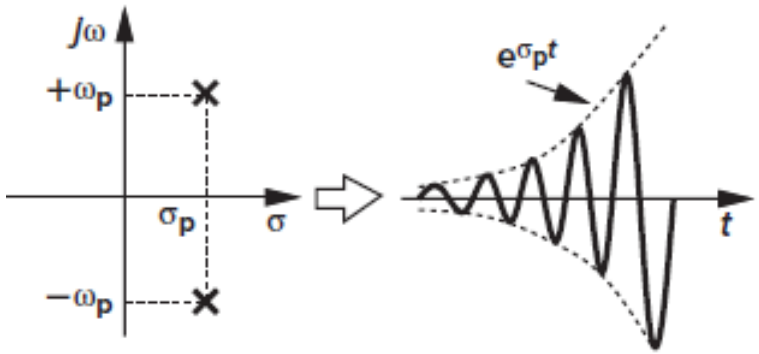


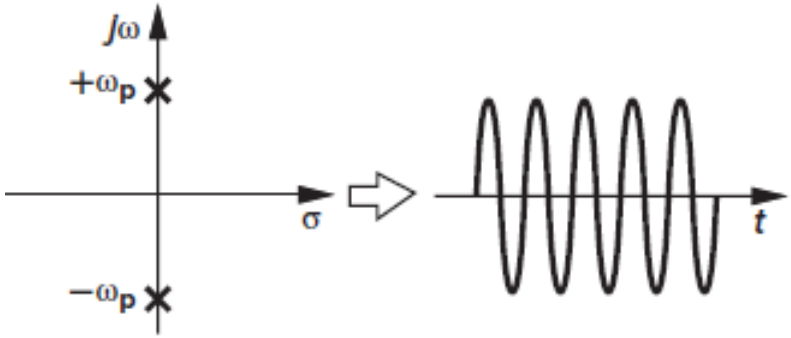


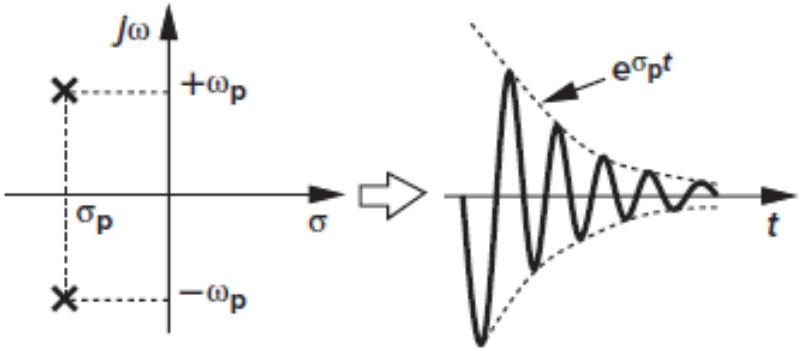


$$\beta H = \frac{1}{as^2 + bs + c},\ s = \sigma_p + j\omega_p$$

a term of impulse response:

$$\exp\left(\sigma_p + j\omega_p\right)$$

# One-Pole System

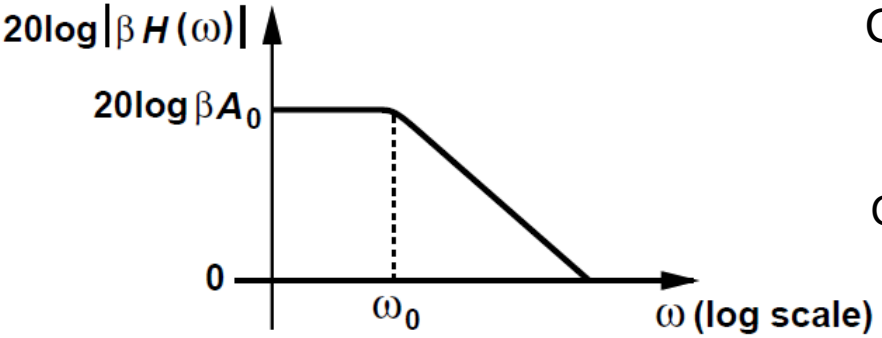


Open loop: $H(s)=\dfrac{A_0}{1+s/\omega_0}$

Close loop: $\dfrac{Y(s)}{X(s)}=\dfrac{\dfrac{A_0}{1+\beta A_0}}{1+\dfrac{s}{\omega_0(1+\beta A_0)}}$

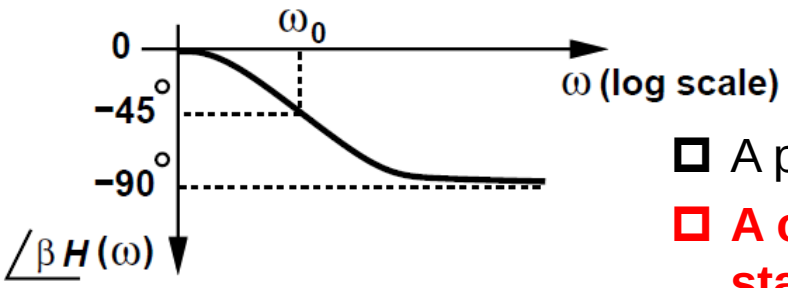


- A phase shift less than 90 °
- **A one-pole system is unconditionally stable**

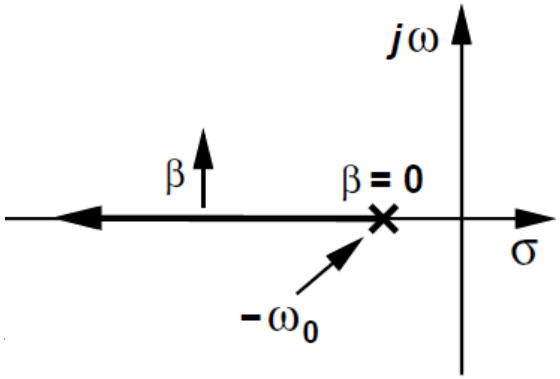


- A real-valued pole in the **left half plane**
- Pole moves away from the origin as the loop gain *β* increases

# Two-pole Systems

$$\omega = \omega_{p1}, \angle\beta H = -45^\circ$$

$$\omega = 10\omega_{p1}, \angle\beta H \Rightarrow -90^\circ$$

$$\omega = \omega_{p2}, \angle\beta H = --135^\circ$$

$$\omega = 10\omega_{p2}, \angle\beta H \Rightarrow -180^\circ$$

- Stable: PX> -180 ° @GX

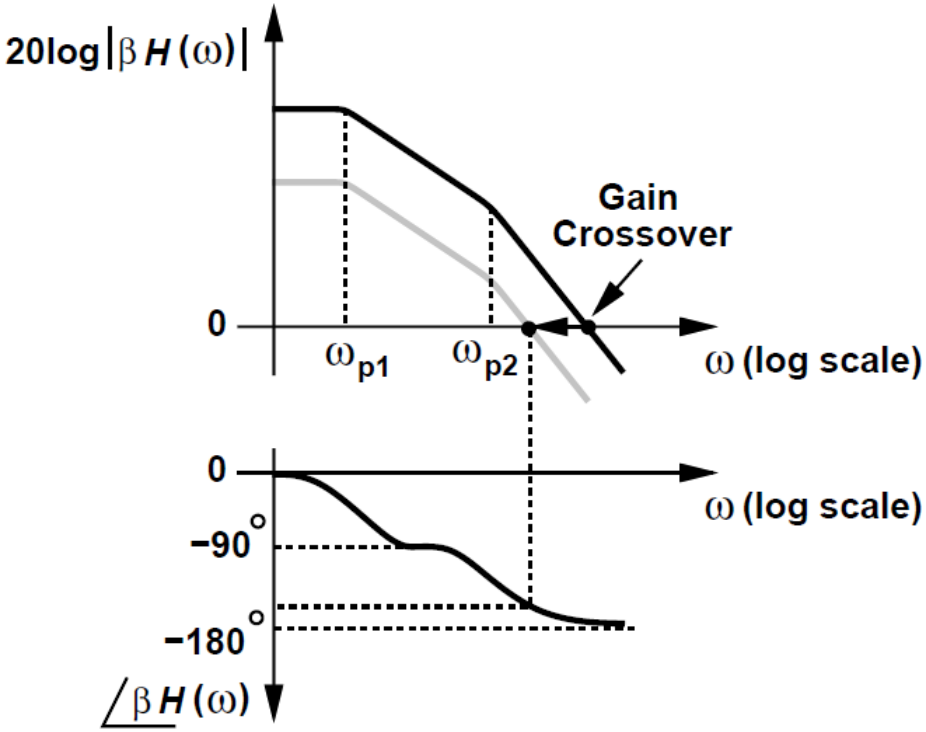

# Three-Pole Systems

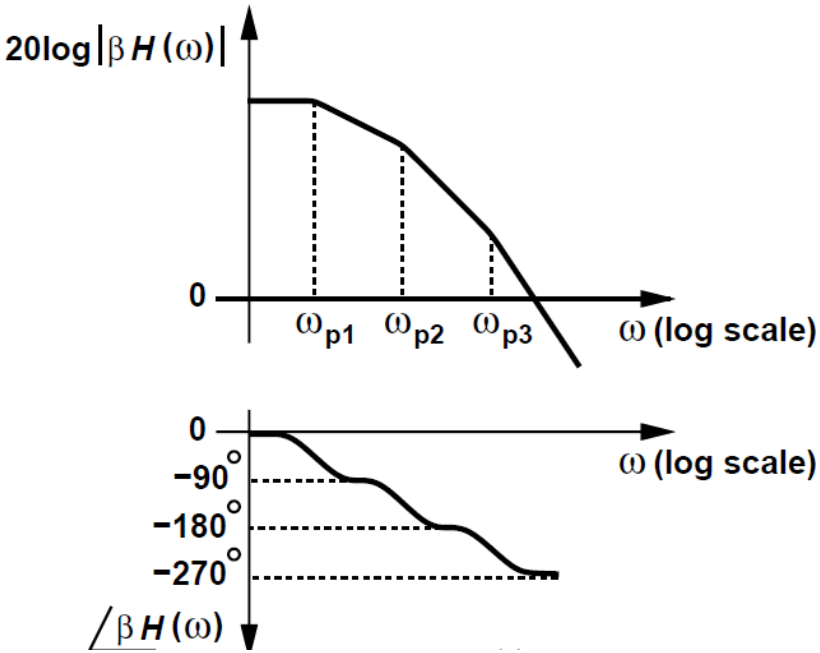


- $\omega_{p3}$: additional phase shift

  decreases the magnitude of the loop gain at a greater rate

  => GX does not move as much as PX

  => additional poles/zeros affect the phase gristlier than they do the magnitude

# Phase margin (PM)

## How far should PX be from GX?

$$PM = 180^\circ + \angle\beta H\left(\omega = \omega_1 @ GX\right)$$

- A "well-behaved" closed-loop response concludes a greater spacing between GX and PX
- The **unity-gain bandwidth** cannot exceed the second pole frequency
- For large-signal application, time-domain simulation of closed-loop system **more relevant** and useful than small-signal as computations

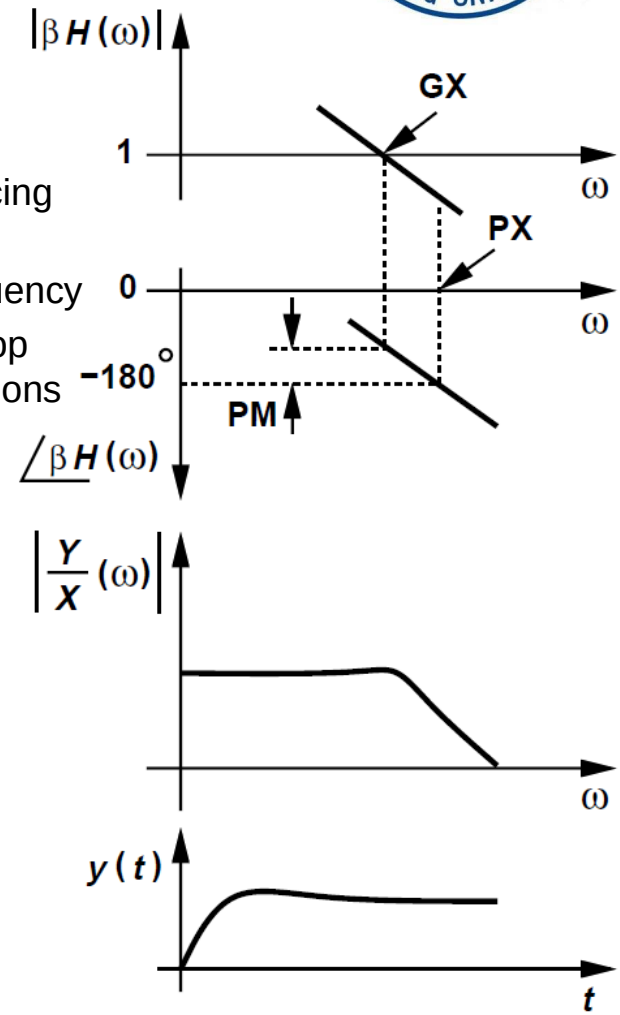


**For 2-pole system**

$$\left|\beta H\left(\omega_{p2}\right)\right| = 1$$

$$PM = ?$$

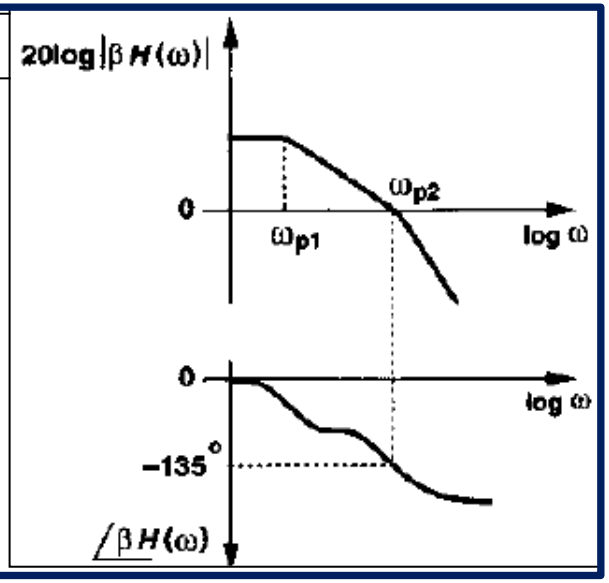

# Phase Margin and step response of closed loop

**PM=45°**

$$\frac{Y}{X}(j\omega_1)=\frac{H(j\omega_1)}{1+1\times\exp(-135^\circ)}=\frac{H(j\omega_1)}{0.29-0.71j}=\frac{1.3}{\beta}$$

$$\left|\frac{Y}{X}\right|(\omega=\omega_1)=\frac{1}{\beta}\frac{1}{|0.29-0.71j|}=\frac{1.3}{\beta}$$

-- The frequency response of the feedback system suffers from a 30% peak at $\omega=\omega_1$

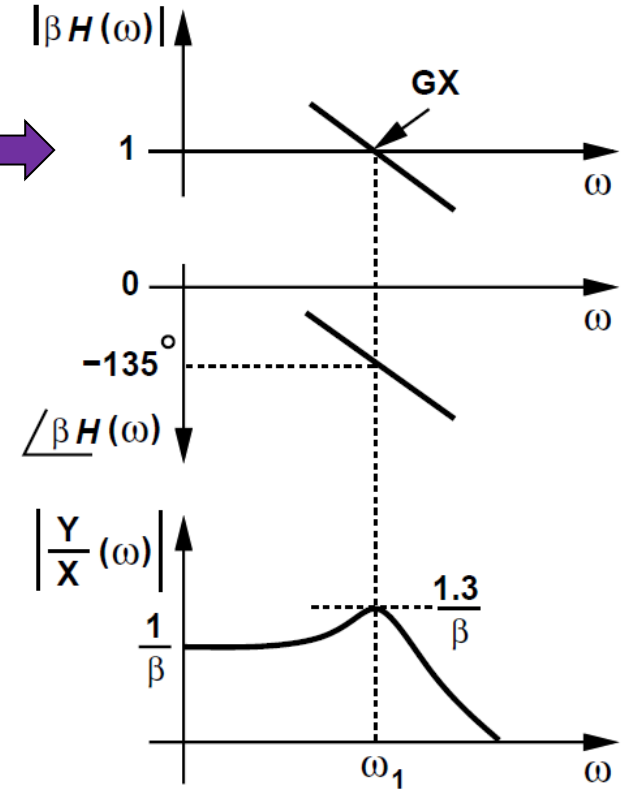


**PM=60°** $\left|\frac{Y}{X}\right|=\frac{1}{\beta}$

**Trade-off**

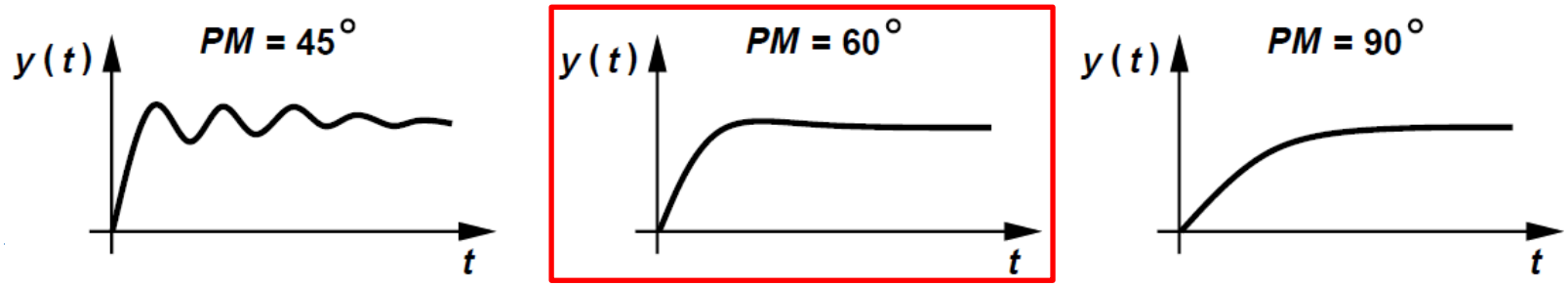

# Phase Margin and step response of closed loop

- For less PM, exhibits more ringing
- For greater PM, the system is more stable, **but the time response slows down**
- Generally, PM>45 ° and the optimum value: PM=60 °

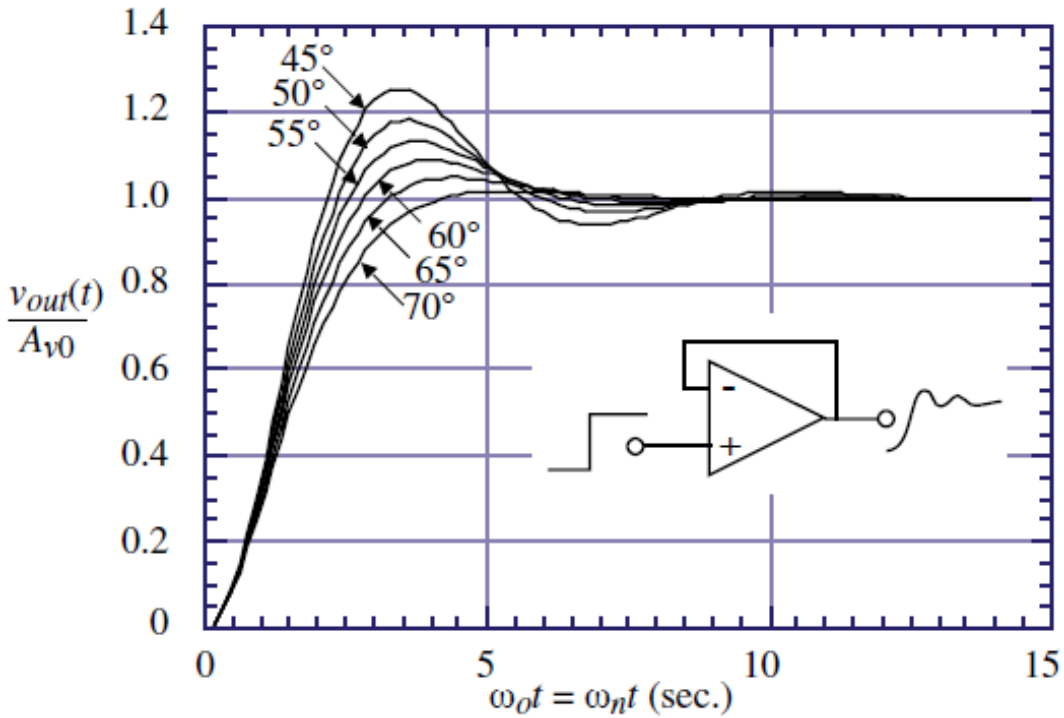


**Trade off**

# Outline

- General Consideration
- One-Stage Op Amps
- Two-Stage Op Amps
- Compensation of 2-Stage Op Amps

  -> Control Theory

  -> Miller compensation
- Other Issues of Op Amps

# Compensation of 2-stage Op Amps

## -- Miller Compensation

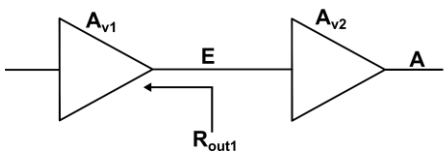


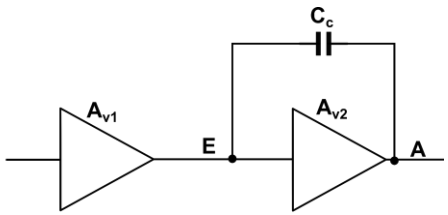


Stage 1: High output impedance

Stage 2: A moderate gain

- **dominating pole: a large C at node E** $C_{eq} = C_E + (1 + A_{v2}) C_C$

$\Rightarrow$ a low frequency pole with a moderate capacitor

***Miller Compensation !***

$$f_{pE} = \frac{1}{2\pi R_{out1}\left[C_E + (1 + A_{v2}) C_C\right]} \approx \frac{1}{2\pi R_{out1} A_{v2} C_C}$$

$\Rightarrow$ move the output pole away from the origin

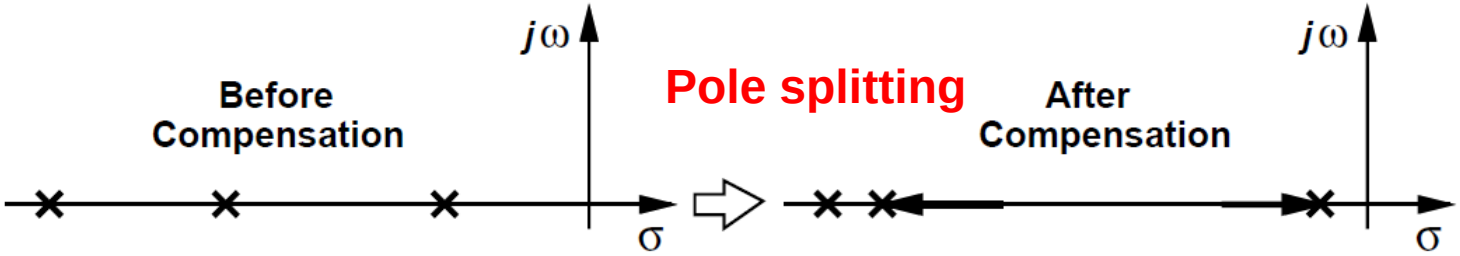

# Miller Theorem

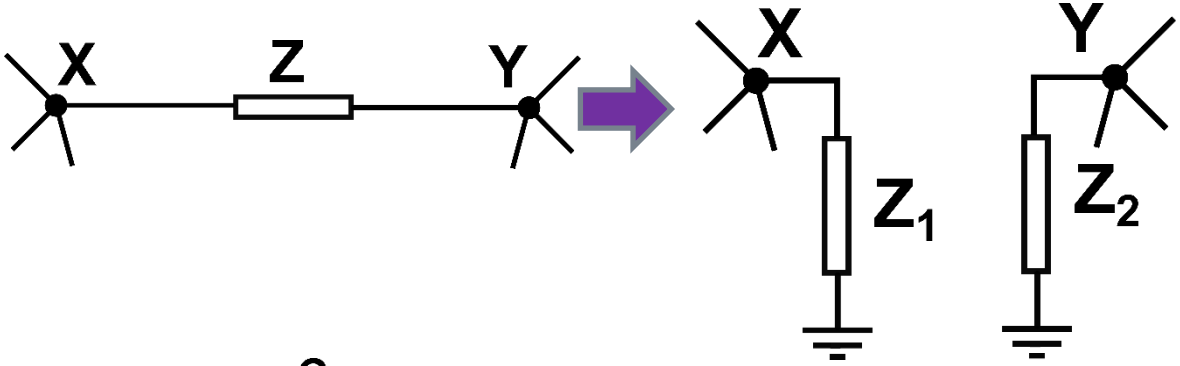


$$Z_1 = \frac{Z}{1-\frac{V_Y}{V_X}} = \frac{Z}{1-A_v}$$

$$Z_2 = \frac{Z}{1-\frac{V_Y}{V_X}} = \frac{Z}{1-(A_v)^{-1}}$$

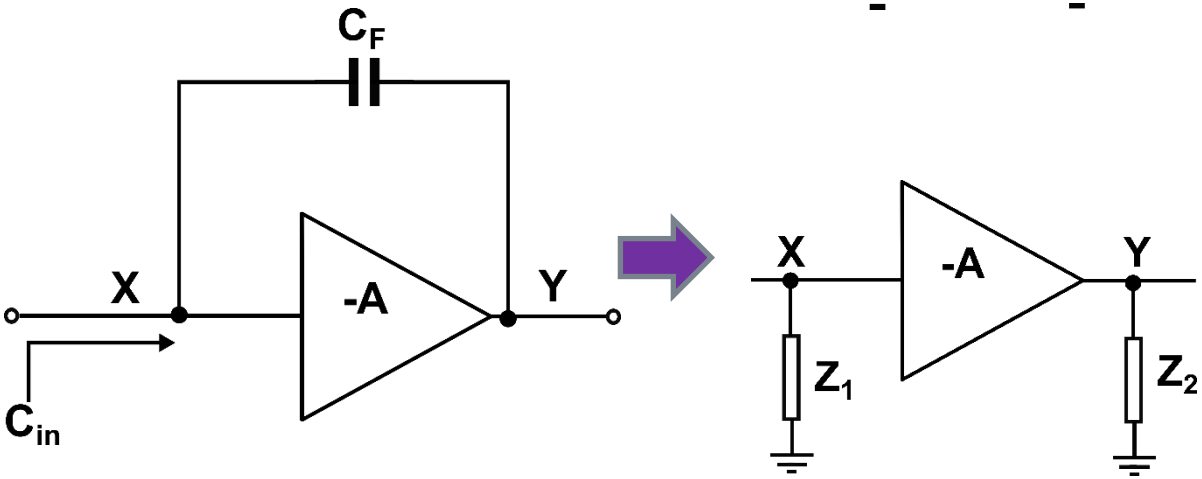


$$C_{in} = C_F\left(1+A\right)$$

$$C_{out} = C_F\left(1+A^{-1}\right)$$

# 2-stage Op Amps with Cc

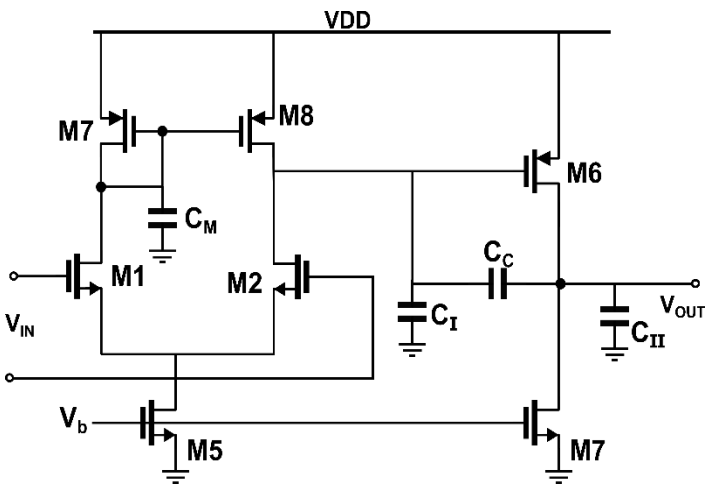


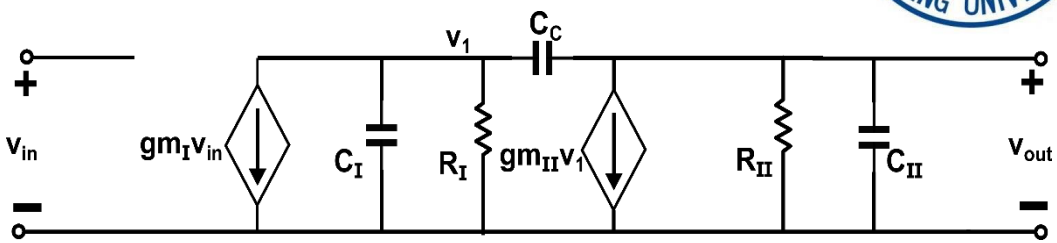


$g_{mI} = g_{m1} = g_{m2}$, $R_I = r_{ds2} \| r_{ds4}$, $C_I = C_1$

$g_{mII} = g_{m6}$, $R_{II} = r_{ds6} \| r_{ds7}$, $C_{II} = C_2 = C_L$

$C_c$ = accomplishes the Miller compensation

$C_M$ = capacitance associated with the first-stage mirror (mirror pole)

$C_I$ = output capacitance to ground of the first-stage

$C_{II}$ = output capacitance to ground of the second-stage

$$-g_{mI}V_{in} = [G_I + s(C_I + C_c)]V_2 - [sC_c]V_{out}$$

$$0 = [g_{mII} - sC_c]V_2 + [G_{II} + sC_{II} + sC_c]V_{out}$$

$$\frac{V_{out}(s)}{V_{in}(s)} = \frac{g_{mI}(g_{mII} - sC_c)}{G_I G_{II} + s\,[G_{II}(C_I + C_{II}) + G_I(C_{II} + C_c) + g_{mII}C_c] + s^2[C_I C_{II} + C_c C_I + C_c C_{II}]}$$

$$= \frac{A_o[1 - s\,(C_c/g_{mII})]}{1 + s\,[R_I(C_I + C_{II}) + R_{II}(C_2 + C_c) + g_{mII}R_I R_{II}C_c] + s^2[R_I R_{II}(C_I C_{II} + C_c C_I + C_c C_{II})]}$$

where, $A_o = g_{mI} g_{mII} R_I R_{II}$

# 2-stage Op Amps with Cc

In general, $D(s) = \left(1-\frac{s}{p_1}\right)\left(1-\frac{s}{p_2}\right) = 1-s\left(\frac{1}{p_1}+\frac{1}{p_2}\right)+\frac{s^2}{p_1p_2} \rightarrow D(s) \approx 1-\frac{s}{p_1}+\frac{s^2}{p_1p_2}$, if $|p_2|>>|p_1|$

$$\boxed{p_1 = \frac{-1}{R_I(C_I+C_{II})+R_{II}(C_{II}+C_c)+g_{mII}R_IR_{II}C_c} \approx \frac{-1}{g_{mII}R_IR_{II}C_c}}$$

--Dominant left-half pole (the Miller pole)

--This root accomplishes the desired compensation

$$\boxed{p_2 = \frac{-[R_I(C_I+C_{II})+R_{II}(C_{II}+C_c)+g_{mII}R_IR_{II}C_c]}{R_IR_{II}(C_IC_{II}+C_cC_I+C_cC_{II})} \approx \frac{-g_{mII}C_c}{C_IC_{II}+C_cC_I+C_cC_{II}} \approx \frac{-g_{mII}}{C_{II}}}$$

--Left-half plane output pole

--This pole must be ≥ unity-gain-bandwidth or PM will not be satisfied

$$\boxed{z = \frac{g_{mII}}{C_c}}$$ ($C_{II}$> $C_C$>> $C_I$)

-- Right-half plane zero

-- This root is very undesirable: it boosts the magnitude while decreasing the phase

# Conceptually, where do these roots come from?

1) The Miller pole

$$|p_1| \approx \frac{1}{R_{\mathrm{I}}\,(g_{m6}R_{\mathrm{II}}C_c)}$$

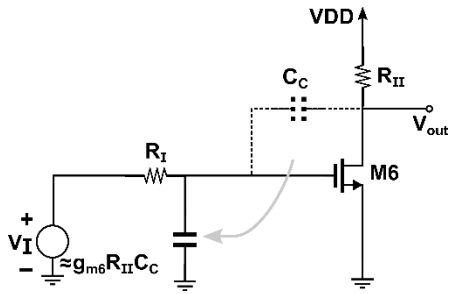


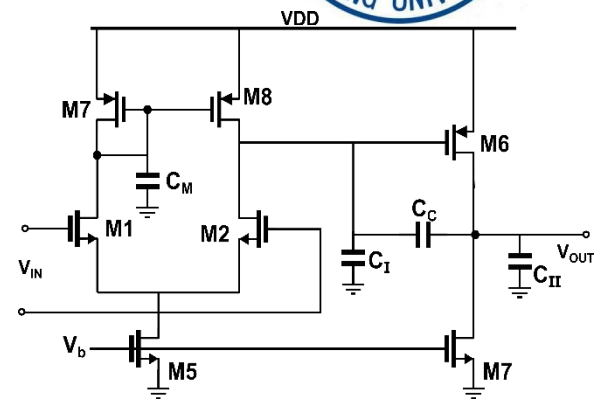


2) The left-half plane output pole:

$$|p_2| \approx \frac{g_{m6}}{C_{\mathrm{II}}}$$

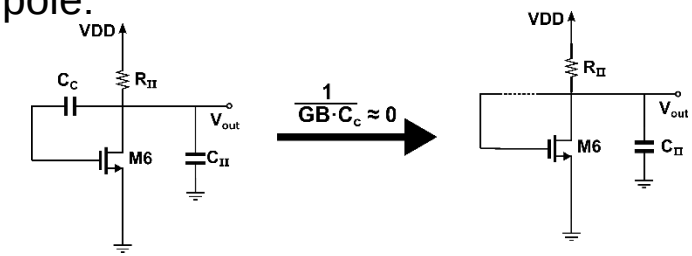


3) Right-half plane zero (One source of zeros is from multiple paths from the input to output):

$$v_{out} = \left(\frac{-g_{m6}R_{\mathrm{II}}\left(\frac{1}{sC_c}\right)}{R_{\mathrm{II}}+\frac{1}{sC_c}}\right)\mathrm{v}' + \left(\frac{R_{\mathrm{II}}}{R_{\mathrm{II}}+\frac{1}{sC_c}}\right)\mathrm{v}'' = \frac{-R_{\mathrm{II}}\left(\frac{g_{m6}}{sC_c}-1\right)}{R_{\mathrm{II}}+\frac{1}{sC_c}}\mathrm{v}$$

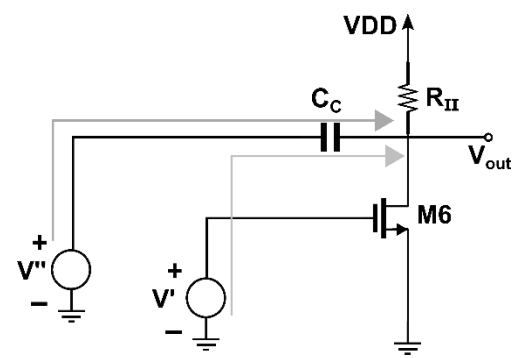


4) Mirror pole-zero $\quad p_3 = -\left(\frac{g_{m3}}{C_3}\right) \qquad z_3 = -\left(\frac{2g_{m3}}{C_3}\right)$

# Outline

- General Consideration
- One-Stage Op Amps
- Two-Stage Op Amps
- Compensation of 2-Stage Op Amps
- Other Issues of Op Amps

# Input Range Limitations

- **Input common-mode level** may need to vary over a wide range,

  e.g. ADC input comparator.

- Input swing limits the total range sometimes.

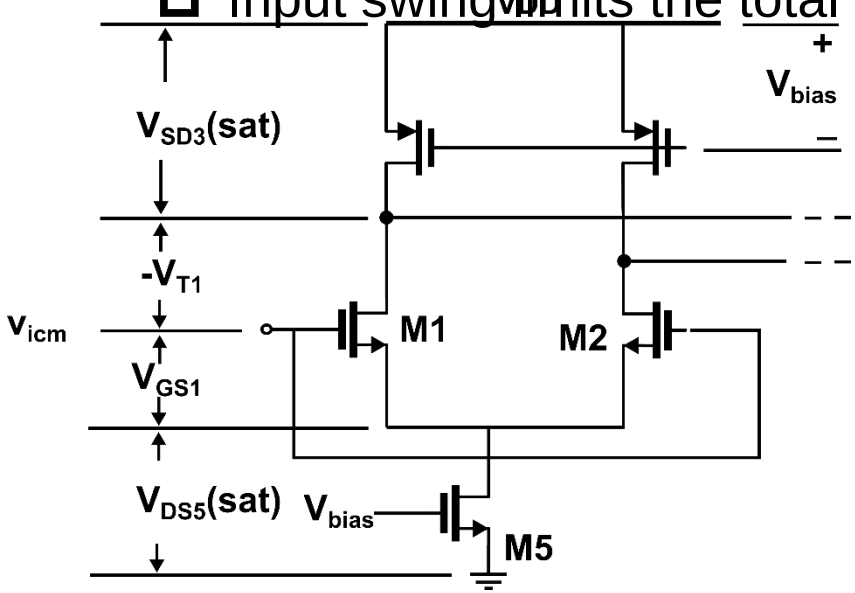


*Assume* $V_{GS}$≈0.9V, $V_{DSsat}$≈0.2V, VDD=1.5V

- Input common-mode range ICMR=0.9V

$$V_{icm}(upper) = V_{DD} - V_{SD3}(sat) + V_{T1}$$ 2.0V

$$V_{icm}(lower) = V_{DS5}(sat) + V_{GS1}$$ 1.1V

- Minimum power supply (*ICMR*=0)

$$V_{DD}(\min)$$
$$= V_{SD3}(sat) - V_{T1} + V_{GS1} + V_{DS5}(sat)$$
$$= V_{SD3}(sat) + V_{DS1}(sat) + V_{DS5}(sat)$$ 0.6V

? Input pair: PMOS

# Input Range Limitations

- N-MOSTs differential pair
- P-MOSTs differential pair

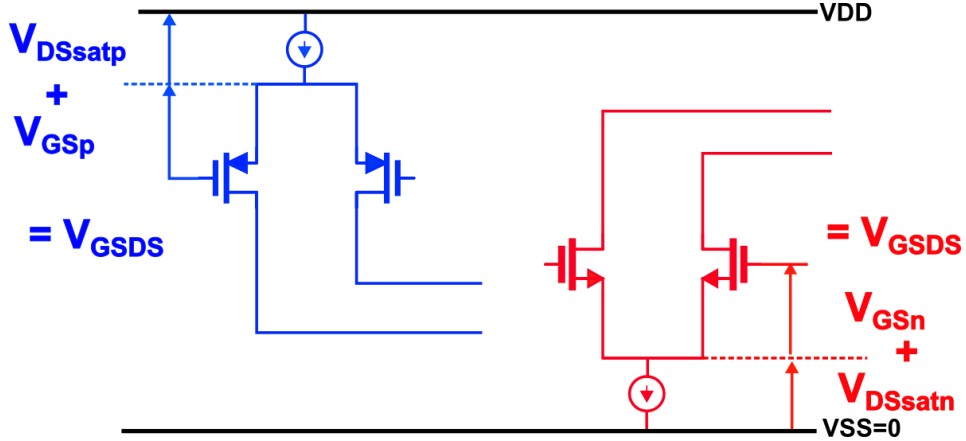


- ***How to extending the input CM range?***

**-- Parallel Input Stage**

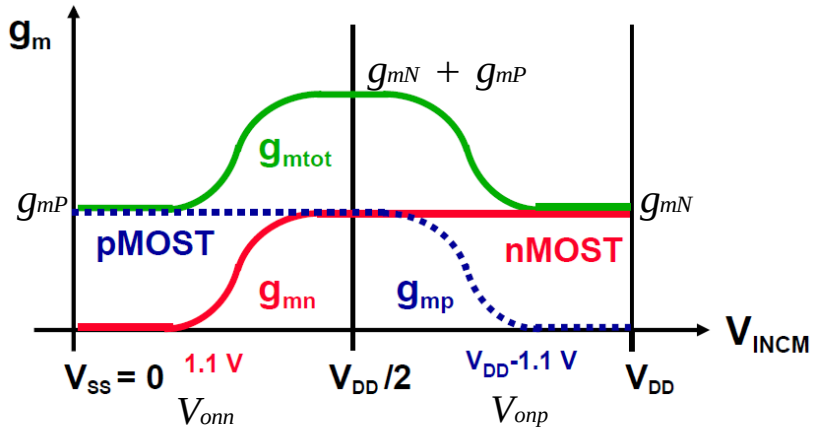

# Rail to rail Folded Cascode

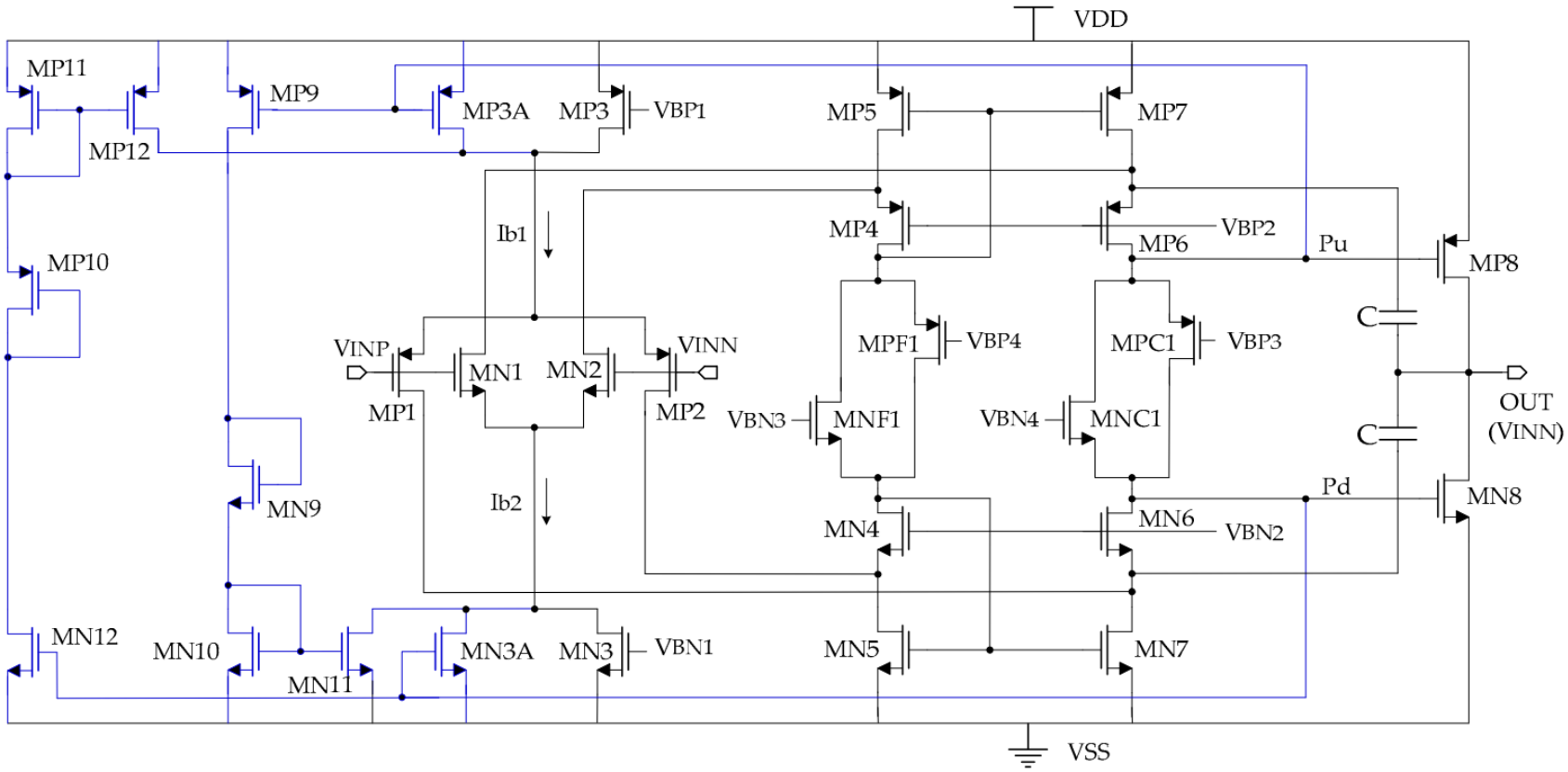


- Input Stage, Gain Stage, Output Stage
- \+ Bias Circuit, Frequency Compensation

# Slew Rate

## Concept of Slew Rate

### Linear circuit

$$\frac{V_{out}}{V_{in}} = \frac{1/sC}{R + 1/sC} = \frac{1}{1 + sRC}$$

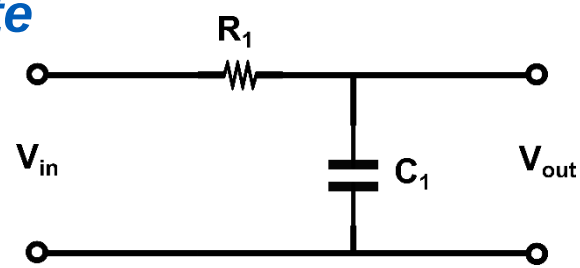


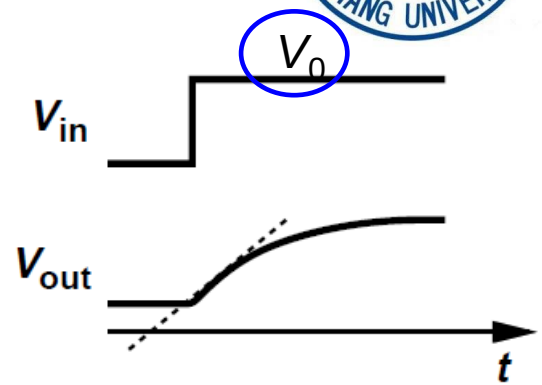


for an input step

$$V_{out} = V_0\left[1 - \exp\left((-t)/\tau\right)\right]$$

$$\frac{dV_{out}}{dt} = \frac{V_0}{\tau}\exp\left(\frac{-t}{\tau}\right)$$

- the slope of the step response is proportional to the final output value $V_0$

## Linear feedback system with op amp

$$\beta = \frac{R_2}{R_1 + R_2}$$

$$V_{out} = \frac{AV_0}{1 + A\beta}\left[1 - \exp\frac{-t}{C_L R_{out}/(1 + A\beta)}\right]u(t)$$

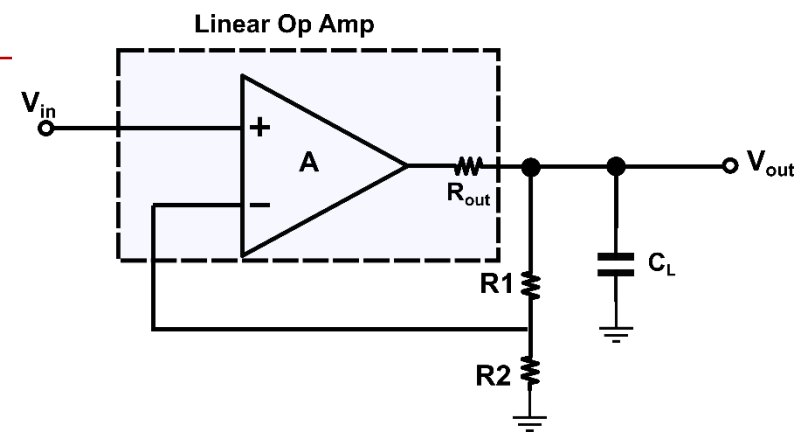

# Linear feedback system with real op amp

- With large input steps, the output displays a linear ramp having a constant slope. The slope of ramp is the "**slew rate**".
- It seems that **the maximum current to charge** the load capacitance is limited.
- Nonlinear behaviors **reduce speed** and increase distortion.
- Increase SR would consume power and wider device

**Trade off**

$$I = C_L \frac{dV_{out}}{dt} = \frac{AV_0}{R_{out}} \exp\left[\frac{-(1+A\beta)t}{R_{out}C_L}\right]$$

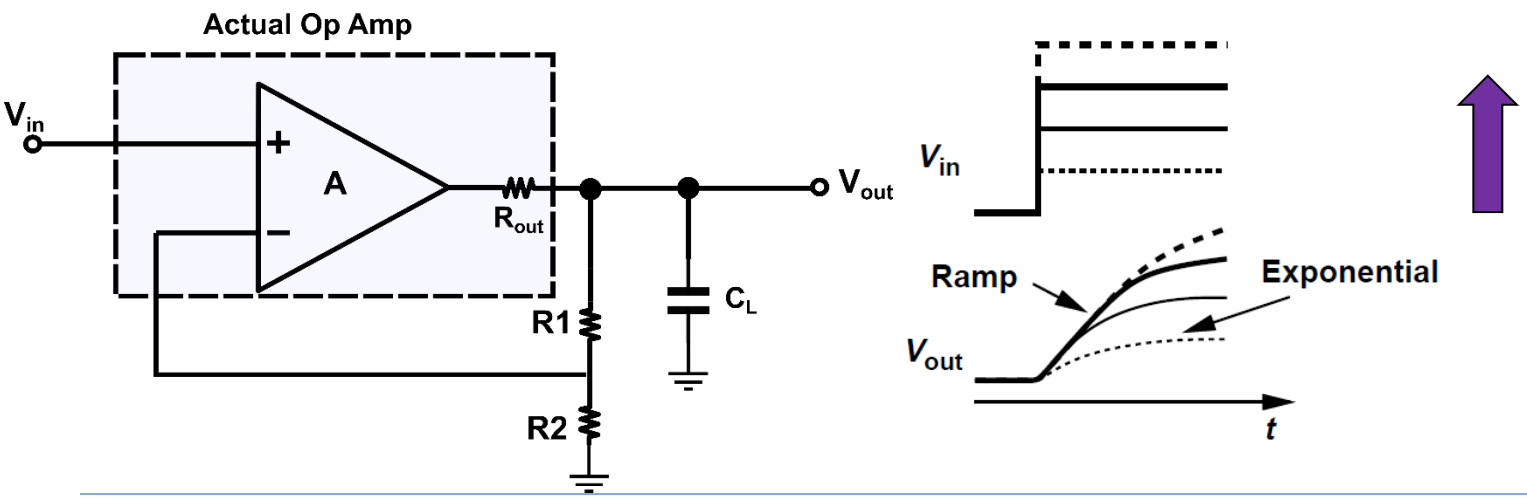

# Slewing in op amp

- $V_{in}$ : $\uparrow \Delta V$,

  $V_{G1}\uparrow$: $I_{D1}\uparrow$ $g_m\Delta V/2$

  $V_{G2}\downarrow$: $I_{D2}\downarrow$ $g_m\Delta V/2$

  => the charging current to $C_L$:

  $I = g_m\Delta V$

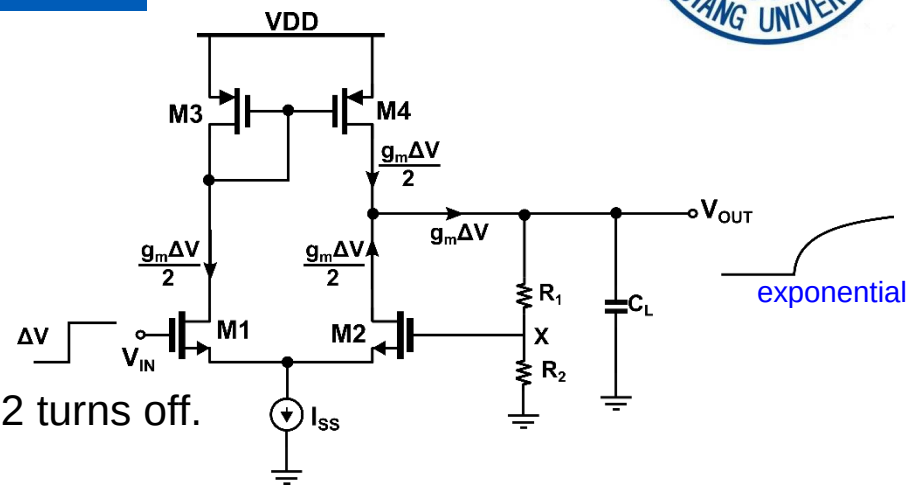


- When M1 experiences a large step, M2 turns off.
  - $C_L$: a constant current I $I_{SS} = g_m\Delta V$
  - Feedback is broken but after M2 turns on,
  - the circuit returns to a linear operation.
  - Slew rate:

$$\boxed{I_{SS}/C_L}$$

be independent of the input !!!

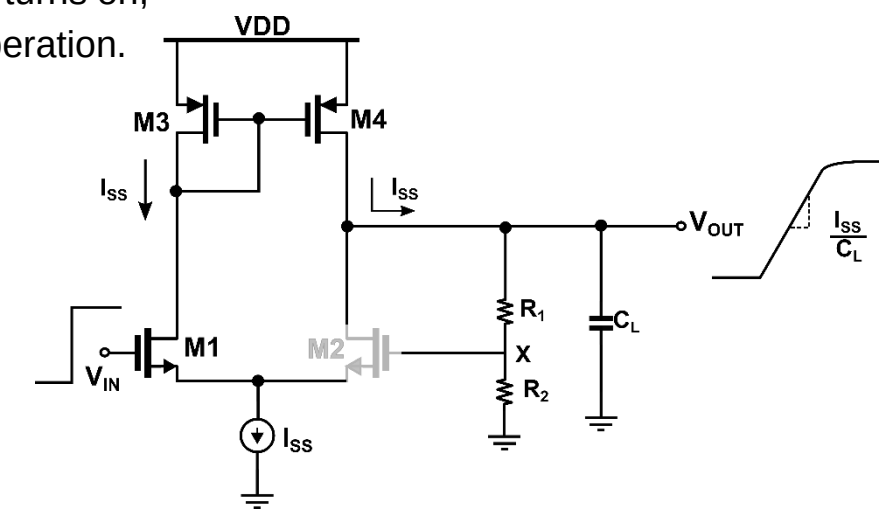


- $V_{in} \downarrow \Delta V$

  -- Slew rate: $\boxed{I_{SS}/C_L}$

# Slew Rate of Telescopic and Folded op amp

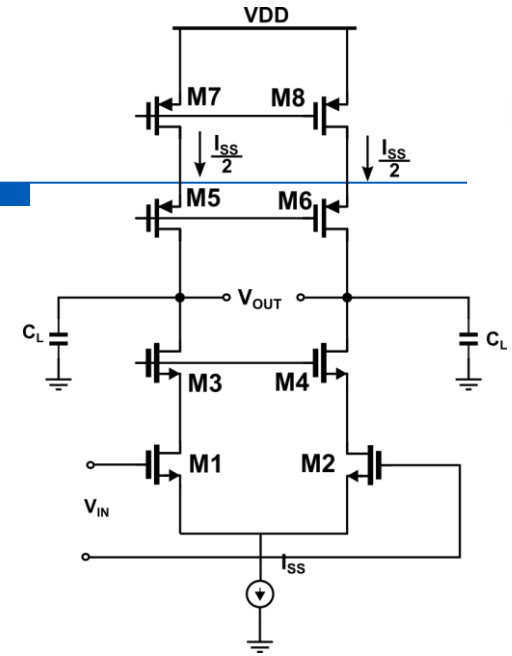


- **Telescopic op amp**

-- The ramp slope in each side: $\pm I_{SS}/(2C_L)$

-- The slew rate for $V_{out1} - V_{out2}$ : $I_{SS}/C_L$

- **Folded op amp**

--if $I_P \geq I_{SS}$, slew rate: $I_{SS}/C_L$

--if $I_{SS} > I_P$, M3 turns off and tail current source enters the triode region. The settling time increases.

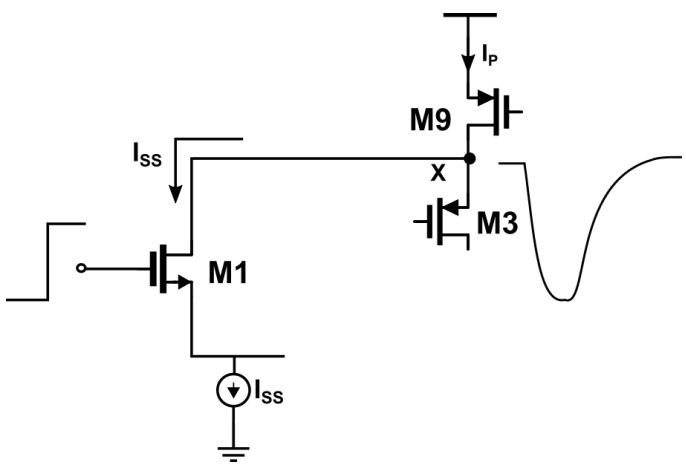


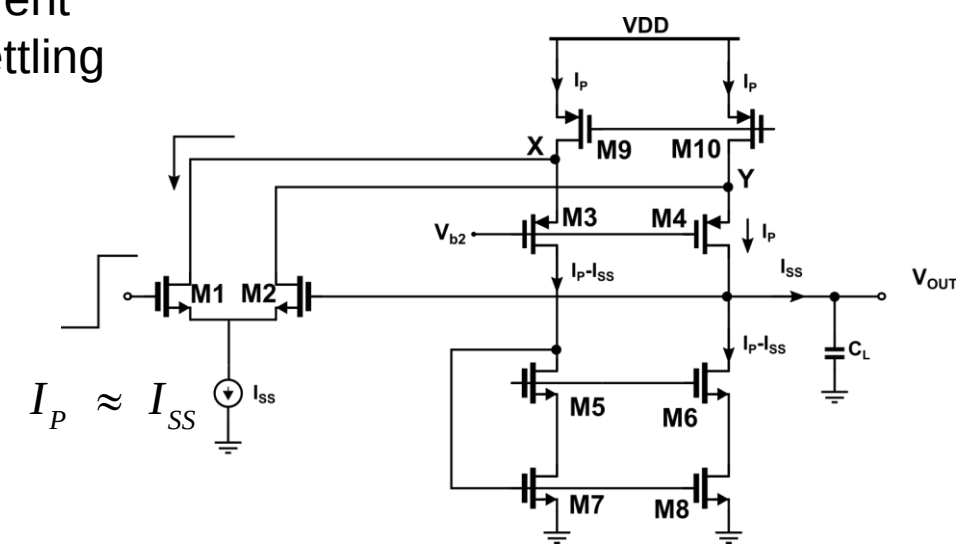


$$I_P \approx I_{SS}$$

# Other examples (1)

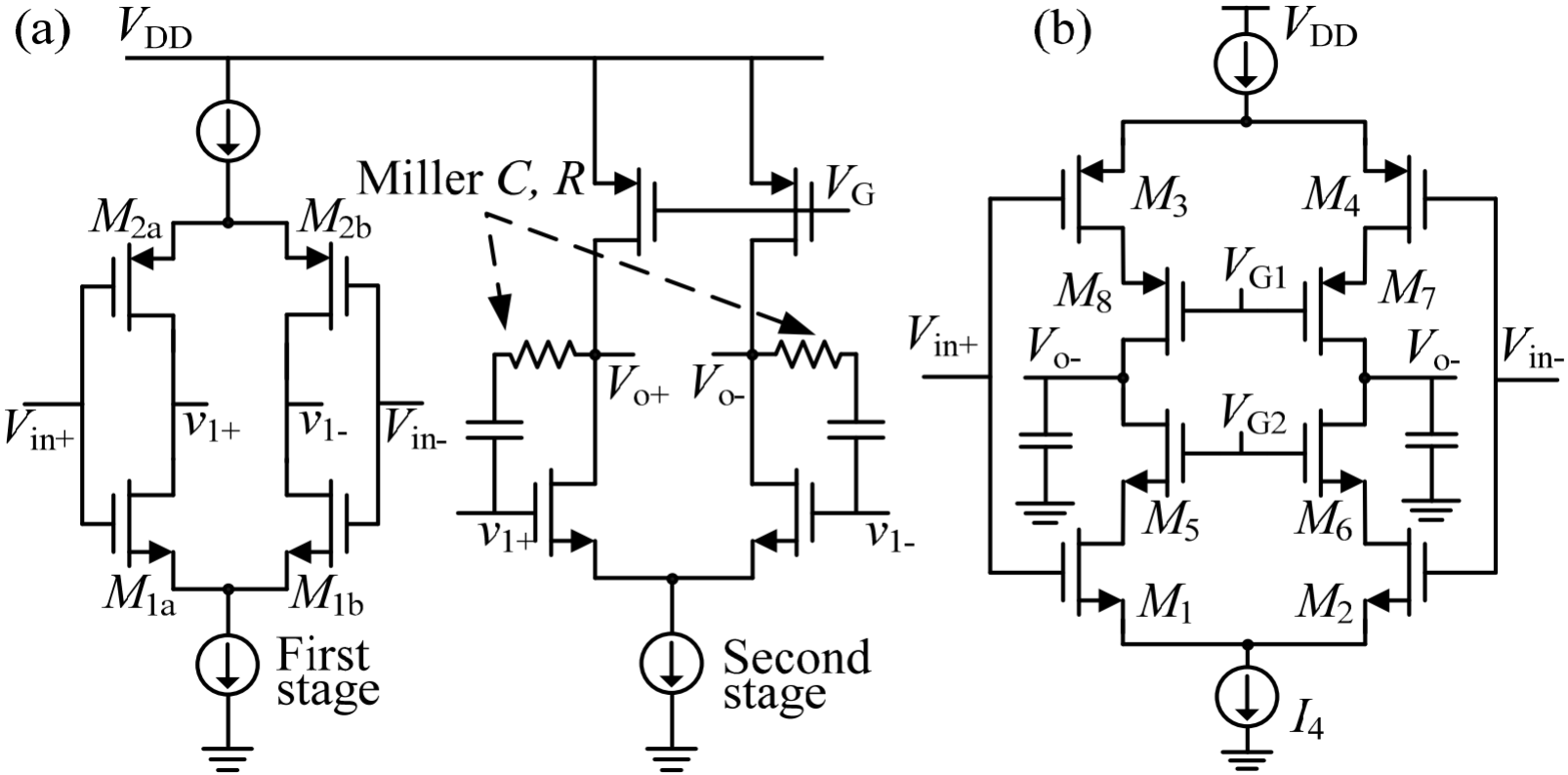


- Current reuse: two stage and telescoppic

# Other examples (2)

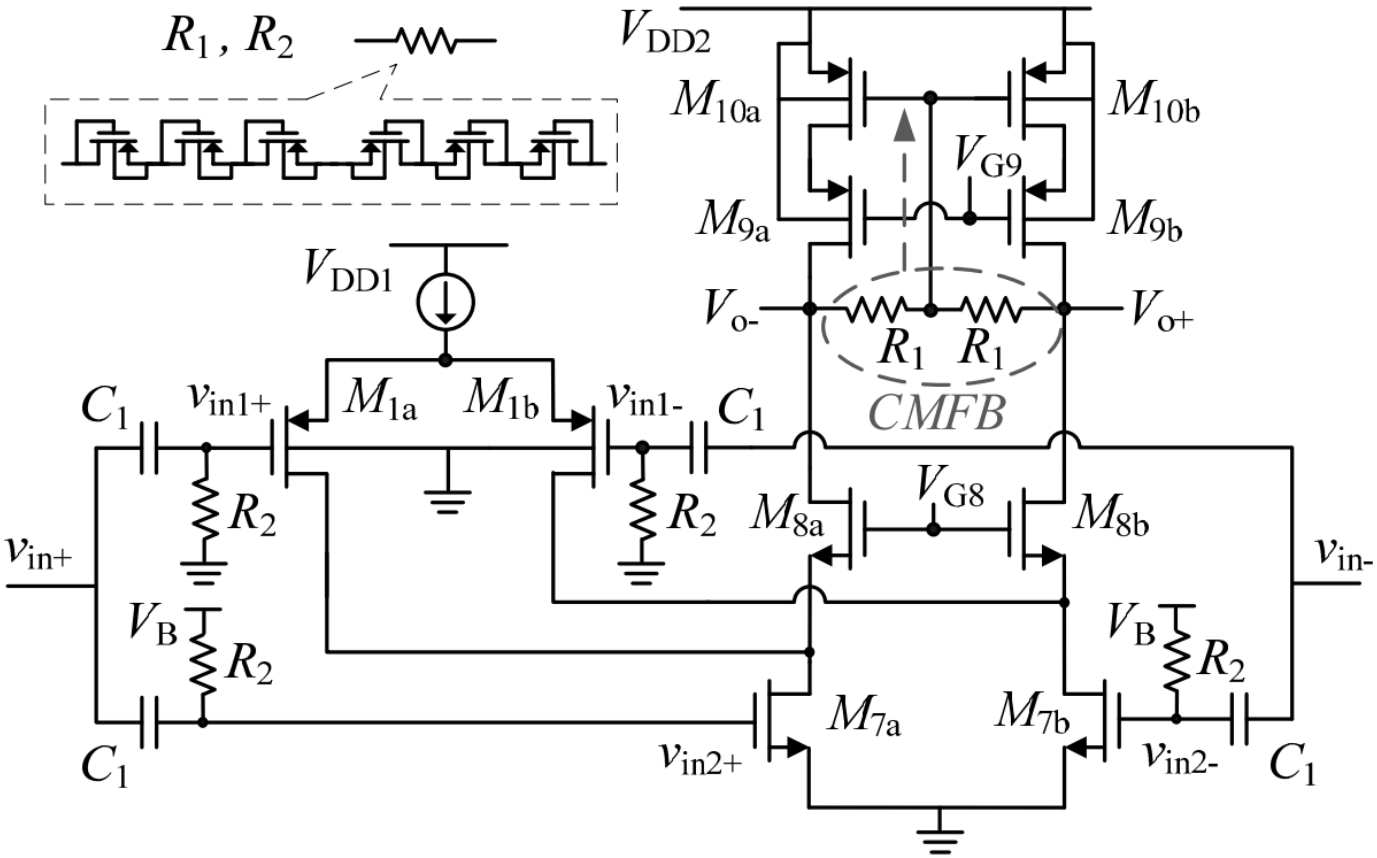


- Current reuse: folded cascode

# Summary

- Ideal Opamp
- DC gain and dominant pole of single stage, telescopic and folded-cascade amplifier
- DC gain and two poles of two stage amplifier, after miller compensation
- Input and output range

  (everyone in saturation)
- Speed and Slew rate

  (small signal and large signal behavior)

# 集成电路原理与设计
# 10.运算放大器

宋爽
shuangsonghz@zju.edu.cn